AD682670

NOT REPRODUCIBLE

SYSTEM ID: SLS

TITLE: Serial Library System Update and Reporting

PURPOSE OF SYSTEM:

To maintain records of the Biological Laboratory Technical Libraries scientific and technical journals. These records have been automated to facilitate the production of receiving reports, accession lists, routing lists and management review of subscription contracts.

REQUESTED BY: Biological Lab Technical Library

ANALYST: D.E. Westfall, Wolf Research and Development Corporation

PROGRAMMER: D.E. Westfall, Wolf Research and Development Corporation

DOCUMENTED BY: D.E. Westfall, Wolf Research and Development Corporation

SOURCE LANGUAGE: COBOL

COMPUTER: CDC 3150

REQUIRED COMPONENTS: READER, PUNCH, PRINTER, 2 Magnetic Tapes, 2 Disk Drives

OBJECT TIME STORAGE REQUIREMENTS: Main Memory:

Secondary:

SECURITY CLASSIFICATION: Program: Unclassified
Data: Unclassified

DDC
RECEIVED
FEB 27 1969
B

This document has been approved for public release and sale; its distribution is unlimited

Best Available Copy

OBJECTIVE:

To maintain records of the scientific and technical journals in the Biological Lab Technical Library for production of routing slips, accession list, subscription contract review.

SYSTEM DESCRIPTION:

Records are updated (additions, deletions, and changes) on a monthly basis by use of receipt cards, and route cards received from the Library. The Update Program produces the current month accessions, first copy list, route list and expected issue cards to be recycled through the system during the next update cycle.

Special management review lists for contract renewal are produced as required.

The following section (Page 3 through 6) describes the methods and input cards to be used by the Journal Control Center of the Technical Library in preparing transaction cards to create and update the Publication Master, Accession and Route file for the Serial Library System and to produce the required reports and special listings.

General

The system inputs for update and normal processing as shown in Attachment 1 are:

a. Date control card for program SLS01.

b. Title card (1 in Col. 80)

c. Vendor information/address cards (2 and 3 in Col. 80)

d. Publisher information card (4 in Col. 80)

e. Cross reference cards (5 and 6 in Col. 80)

f. Route file information card (9 in Col. 80)

g. Accession delete card (7 in Col. 80)

The special data control cards for accession lists and the suppliers lists are shown in Attachments 2 through 5.

CREATE PROCEDURES

Publication Master File

The minimum data required to create a record for a new journal on the publication Master File is the title card (1 in Col. 80) with following fields punched:

a. Title code in Col. 1-5

b. Title of journal in Col. 6-58

c. Volume number in Col. 62-65

d. Issue number in Col. 66-69

If available all pertinent information should be loaded at the time the record is created. If not available the record can be updated during any succeeding processing cycle.

Route File

To create a record on the route-file for the required routing of any journal prepare route information card (9 in Col. 80) for each recipient of a specified copy of a journal.

Accession File

The accession file is created by the 1 in Col. 80 card used to create the publication master file. A new record is created for each volume/issue number of a journal as it is received into the system.

UPDATE ACTIONS

Publication Master File

All data on the Master File can be changed. To update and/or correct any data field punch the required data in the appropriate card columns plus the title code in Col. 1-5 and the card code in Col. 80.

Correcting a volume/issue number that is too high requires deletion and a creation. Both of these actions can take place during the same update cycle.

Route File

To correct or change a record in the Route File requires a 9 card with data fields filled in.

Accession File

The Accession File cannot be corrected except through an accession delete and a master record update.

DELETION ACTION

Publication Master File

To delete a record from the Publication Master File requires a 1 card with the title code of the record to be deleted punched in Col. 1-5, the word DELETE in Col. 6-11 and a 1 in Col. 80.

Route File

A 9 card with the title code in Col. 1-5, the sequence number in Col. 7-9 and DELETE in Col. 10-16 will delete a record from the route file.

Accession File

A 7 card with the title code in Col. 1-5, the volume/issue number of the first record to be deleted in Col. 6-13 and the last record in Col. 16-23 will delete records from the Accession File.

ACCESSION LISTS

To produce the First/Last Accession list requires the control card shown in Attachment 2.

To produce the Cumulative Accession List use the control card shown in Attachment 3.

SPECIAL MANAGEMENT REVIEW LISTS

To produce the special management review lists requires the control cards as shown in Attachment 4 and 5. For each title control card (Attachment 4) there can be any number of vendor control cards (Attachment 5).

COBOL NAMES USED IN SYSTEM
TO MANIPULATE DATA IN THE
PUBLICATION-MASTER-FILE RECORD

Location	Size	Type	Source	Data Name	COBOL Name
1-5	5	N	1	Title Code	TTL
6-58	53	A/N	1	Title of Journal	TITLE
59	1	N	1	First Issue Indicator	IST-ISS
60-61	2	N	1	Number of Copies	NR-CY
62-65	4	N	1	Volume Number	VOL-NR
66-69	4	N	1	Issue Number	ISS-NR
70	1	N	1	Continuous Issue Indicator	CONT-ISS
71-74	4	N	1	Frequency	FREQ
75-79	5	A/N	1	Location Filed	LOC
80-83	4	N	3	Number of Issues in a Volume	NR-IN-VOL
85-87	4	N	3	Number of Issues Received	ISS-RECD
88-131	44	A/N	2	Vendor	VEND
132-161	30	A/N	2	Street Address	ADRS-2
162-191	30	A/N	3	City & State Address	ADRS-3
192-221	30	A/N	3	Country Address	ADRS-4
222	1	A/N	3	Language of Publication	LANG
223	1	A/N	3	Foreign Publication	FORGN
224	1	A/N	3	Pay in Advance Indicator	AD-PAY
225-244	20	A/N	4	Publisher	PUB
245-259	15	A/N	4	City of Publication	CTY-PUB
260-279	20	A/N	4	Purchase Order Number	PUR-ORD-NR
280-284	5	N	4	Cost	COST
285-288	4	N	4	Renewal Date	REN-DT
289-298	10	A/N	4	Subject Code	SUB
299-368	70	A/N	5	Cross Reference	X-REF
369-438	70	A/N	6	Issue Holdings	ISS-HLD
439-446	8	N	Comp	Expected Volume Issue	EXP-VOL-ISS

The above COBOL names are used as the basic names for all records. Prefixs/Suffixs below indicate which record or work area is being referred to--

MST	PUB-MST-REC
O	Old MASTER as read
N	New MASTER as written
ACC	ACCESSION Record as read
RT	ROUT-RECORD as read
A-T	1 cards in accession tank
1, 2, 3, 4, 5, 6, 7	References Card
9CD	References 9 card
R-T	Route tank

PROGRAM TITLE: Serial Library Update (SLS01)

PROGRAM OBJECTIVE:

To maintain current records of scientific and technical journals, which reflect for each journal on file in the Technical Library the following data:

1. Title
2. Number of copies
3. Volume/issue number
4. Cost per copy per year (run of subscription)
5. Supplier
6. History of all journals received.
7. Route information
8. Final depository location

PROGRAM DESCRIPTION:

1. The Master Publication and Route Files are loaded to disk from tape. The first issue (Master Publication File) is set to spaces at this time. Date card is read edited and stored. The Accession File is processed from tape with the current month receipt indicator being removed as the file is read.

2. Input cards are sequence checked as read. If the sequence is low, the card with a sequence note is printed, and another card is read. If sequence is high the control goes to the update process.

3. For an equal sequence or first card in a group, the type is determined and the card is stored The following edits are made (if a field is in error the card is printed with *'s over the field in error and moves spaces to that field in memory).

1 card = number of copies, volume/issue number. If volume/issue is in error the card is rejected. If DELETE is punched in the Title field a delete switch is set.

3 card = number of issues per volume and number of issued received.

4 card = cost of subscription

New record = at least a 1 card is required to create a new publication record, if not, list other cards.

4. Expected issue cards are cut for the first time each journal processed, depending on the first 2 characters of the frequency code.

80 Weekly	8
81 Bi-Weekly	4
82 Semi-Monthly	4
All others	2

During succeeding processings, one expected issue card will be cut for each receipt.

When more than one card is cut the volume/ issue number will be adjusted accordingly.

5. All valid 1 cards will be loaded to the accession file. An indicator will be set to reflect the current months processing.

   A 7 card (accession delete) is required to delete records from the Accession Tape. A single card will cause from one to all issues of any journal to be deleted from the file.

6. A 9 card (route) will cause the route file to be updated. If DELETE is punched in the name field, the corresponding title code/ sequence number record will be deleted.

   An asterisk (*) in Col. 6 indicates the first receipt of a copy of the journal. There will be a maximum of five names per route slip. The same number of route slips will be printed per copy as expected issues cards punched.

7. At end of the job, while dumping the updated files to tape, produce the first copy list from the Master File if first copy field is *. List all route records for Audit. The current months accessions will be listed if current month field in the accession tape is A.

OPERATING INSTRUCTIONS
JC-SLS01

I. CONTROL INFORMATION

A. Usual Source of Data: Fort Detrick Technical Library

B. Point of Contact: Journal Control Room

C. Data Transmittal Form: Expected issue DD 1530 Transcript

D. Frequency of Use: Monthly

E. Due In:

1. Day = 20th of month or first work-day thereafter
2. Time = 1000 hours

F. Due Out:

1. Day = first work-day after due in
2. Time = 0800 hours

G. Estimated Run Time: 30 minutes

H. Usual Priority Status: Routine

I. Security Classification: Unclassified

J. Distribution: TECH Library

II. OPERATING PROCEDURES

Area of Responsibility			Action
Control	1.	a.	Log in DD 1530 Transcription sheets, Expected Issue Cards
		b.	Prepare key Punch instructions W/O--if required
		c.	Forward DD 1530 with instructions to Key Punch
Key Punch	2.	a.	Punch data per instructions
		b.	Return DD 1530 to Control
		c.	Return cards to Control
Control	3.	a.	File DD 1530's
		b.	Combine cards from Library and Key Punch, Prepare Sort instructions
		c.	Forward to EAM
EAM	4.	a.	Sort Col. (N) 80
		b.	Select 1, 9 cards--Maintain Sort Integrity of other cards
		c.	Sort 1 cards Col. (N) 69-62
		d.	Sort 9 cards on Col. (N) 9-7
		e.	Combine 1 and 9 cards in correct sequence with nonselect deck in step a
		f.	Sort 5-1
		g.	Return to control

Area of Responsibility			Action
Control	6.	a.	Prepare SMUFD Form 2006
		b.	Prepare Data card giving price and current month data
		c.	Forward Data deck with 2006 to Computer
Computer	7.	a.	Process SLS01 as indicated on 2006
		b.	Return Input to Control
		c.	Forward Expected Issue Cards to Control
		d.	Forward Listing to Control
Control	8.	a.	File Input in 60-Day Retention File
		b.	Prepare Interpret instructions Forward with Expected Issue to EAM
		c.	Decolate Burst listings
EAM	9.	a.	Interpret Expected Issue Card
		b.	Return to control
Control	10.	a.	Forward Listings and cards to Library

WORK FLOW: SLS01 - SERIAL LIBRARY UPDATE

ACTION	CONTROL	KEYPUNCH	EAM	COMPUTER

1. UPDATE FORMS and ISSUE RECEIPT CARDS logged in from BIOLOGICAL LAB TECH LIBRARY.

2. UPDATE FORMS forwarded to KEYPUNCH with punch instructions.

3. UPDATE FORMS returned to CONTROL after KEYPUNCH.

4. Keypunched cards returned to CONTROL and combined with ISSUE RECEIPTS.

5. Combined cards forwarded to EAM to sort as follows:
   Col.(N)80 - select 1 & 9.
   (Maintain sort sequence on HOLD cards.)
   1 card - sort Col.(N) 69-62.
   9 card - sort Col.(N) 9-7.
   Combine 1 & 9 cards in correct sequence with HOLD cards.

6. Return sorted cards to CONTROL.

7. Prepare SMUFD 2006 and control card. Forward to COMPUTER.

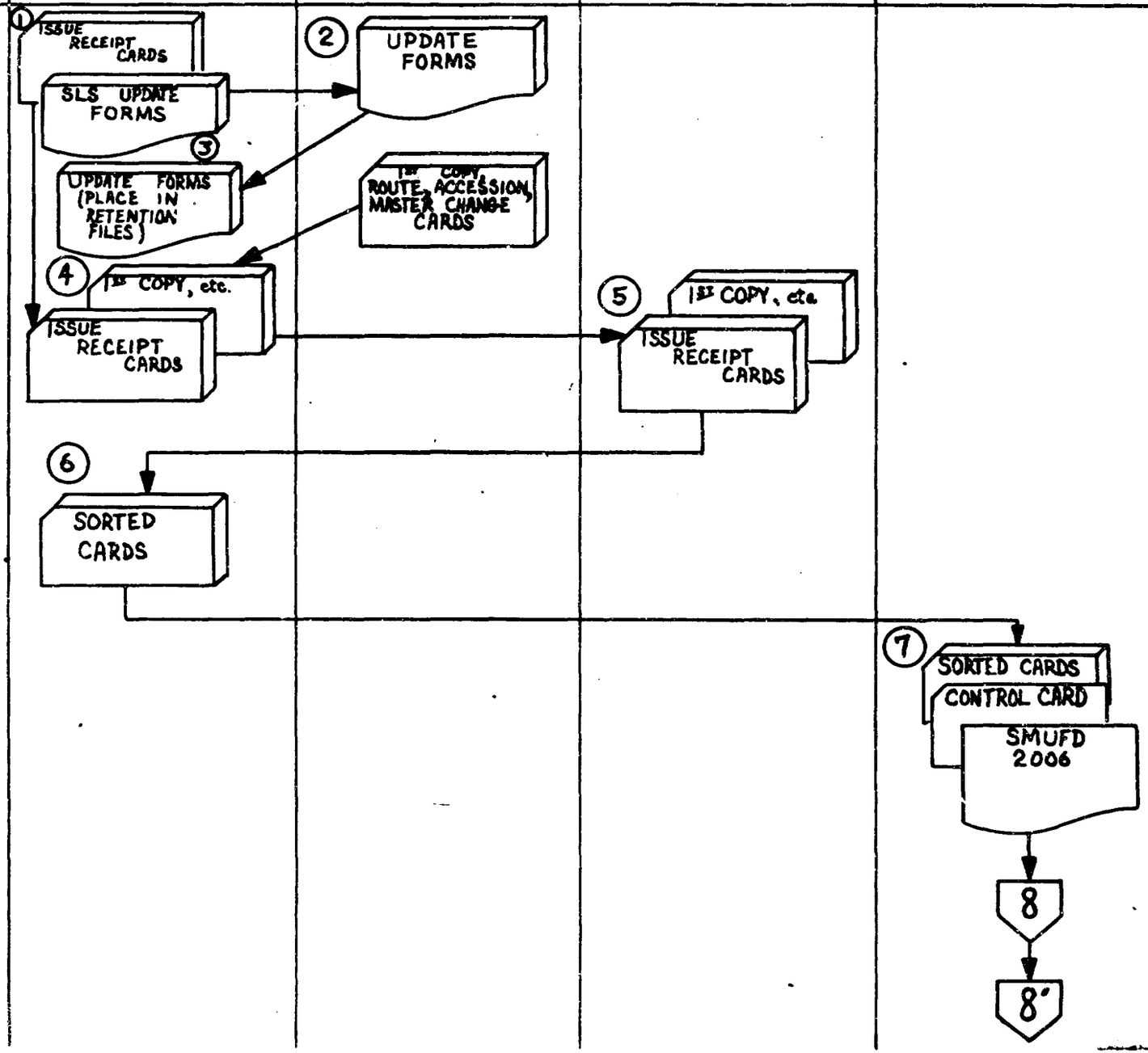

8. Run program SLS01. Output EXPECTED ISSUE CARDS and four copies of each listing.

8'. Return input and operator instructions to CONTROL.

9. Forward all output to CONTROL - CONTROL log in.

10. Forward EXPECTED ISSUE CARDS to EAM for interpretation of Col. 1-5
6-58 upper line

62-65
66-69 lower line

11. Return interpreted cards to CONTROL.

12. Burst listings. Forward listings and EXPECTED ISSUE CARDS to TECHNICAL LIBRARY.

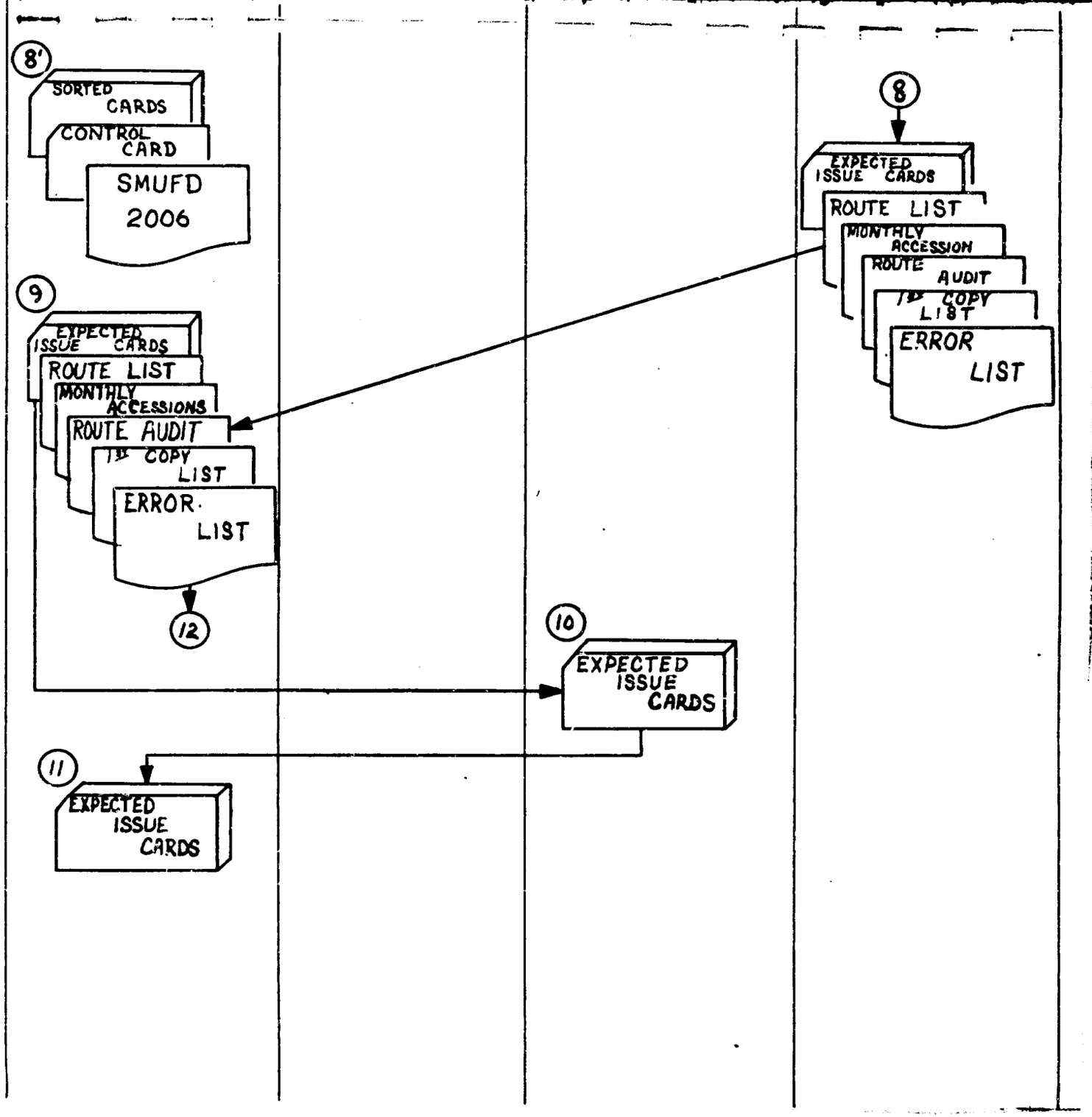

3150 OPERATING INSTRUCTIONS

MAX.TIME 1 Hr. SEQUENCE NO. _____

RUN ID SLS01 RUN NAME Serial Library Update and Edit

REQUESTER Journal Control Room ATTEND _____ AUTH. _____

COST CENTER _____ WORK CODE _____ STEP _____

FORE/BACK _____ MSOS/OTHER _____

JUMP SWITCH: 1. _____, 2. _____, 3. _____, 4. _____, 5. _____

MAG.TAPE:

	UNIT	LUN	LABEL	REEL	RING	DISPOSITION
IN:	01	04	SLSOIMST	1		
		06	SLSOIROT	1	Out	Hold on File
	01	05	SLOIACC	1	Out	Hold File
OUT:	02	07	SLSOIACC	1	In	Master File
	01	04	SLSOIMST	1	In	
	02	06	SLSOIROT	1	In	Master

CARDS:

IN: LABEL SLS01CDS DISPOSITION 60-Day retention

OUT: LABEL Expected receipts DISPOSITION EAM/TECH Library

DISK:

PACK NO. SCRATCH, _____, _____, _____

PRINTER: 1413 - 5x8

LABEL TECH LAB. FORM NO. Continuous PARTS 2 CARRIAGE TAPE Standard

PAPER TAPE:

IN: LABEL _____ DISPOSITION _____

OUT: LABEL _____ DISPOSITION _____

SPECIAL INSTRUCTIONS:

SMUFD FORM 2006 (Test)
(Aug 68)

HALTS:

NO.	CAUSE/CORRECTIVE ACTION
01	Remove Master tapes SLS01MST from LU04 and SLS01ROT from LU06. Mount Master Tape SLS01ACC on LU05 and a scratch tape labeled SLS01ACC with today's date on LU07.
02	Remove Master Input SLS01ACC from LU05, Mount scratch tape labeled with today's date on LU04.
03	Remove Master Output Tape SLS01MST from LU04.
05	Remove Master Output Tape SLS01ACC from LU07. Mount scratch tape labeled SLS01ROT with today's date on LU06.
06	Remove Master Output Tape SLS01ROT from LU06. Load printer with 5x8 continuous card stock.

OPERATOR COMMENTS:

PROGRAM TITLE: Accession List (Selective) (SLS02)

PROGRAM OBJECTIVE:

The program objective is to list all journal titles with cross reference information and the volume/issue number of copies received, depending on the control data.

PROGRAM DESCRIPTIONS

If control card "ALL" is read, list the title of the journal, then list the volume/issue number and cross reference issue hold data for each issue on file. On change of journal, print next-title, etc.

If control is "FIRST", print the title of a journal and the volume/issue numbers of the first and last issue received.

OPERATING INSTRUCTIONS
JC-SLS02

I. CONTROL INFORMATION

A. Usual Source of Data: Fort Detrick Technical Library

B. Point of Contact: Journal Control Room

C. Data Transmittal Form: DD 1530 Transcription Sheet

D. Frequency of Use: As required

E. Due In: As required

F. Due Out:
   1. Day = First work-day after receipt
   2. Time = 0800 hours

G. Estimated Run Time:
   1. Partial List 5 minutes
   2. Complete List 20 minutes

H. Usual Priority Status: Routine

I. Security Classification: Unclassified

J. Distribution: TECH Library

Area of Responsibility			Action
Control	1.	a.	Log in Job Request and attached Card Formats
		b.	Prepare Key Punch instructions for Call/Date cards, if cards not received from Library. Forward Key Punch instructions to Key Punch
		c.	If Call cards received from Library, see instruction 3
Key Punch	2.		Key Punch Call cards per instructions. Return cards with instructions to Control
Control	3.	a.	Prepare SMUFD Form 2006 for Program SLS02
		b.	Forward SMUFD 2006 and Call/Date cards to the Computer Section
Computer	4.		Process SLS02 per SMUFD 2006 Return 2006 with Lists to Control
Control	5.		Burst Listings Log out Lists as Job Completed Forward Lists to TECH Library

WORK FLOW: SLS02 - SERIAL LIBRARY ACCESSION LIST

ACTION	CONTROL	KEYPUNCH	COMPUTER

1. Log in request from TECHNICAL LIBRARY.

   Prepare keypunch instructions for CALL/DATE CARD, forward to KEYPUNCH.

2. Punch CALL/DATE CARD.

   Forward keypunch instructions and CALL/DATE CARD to CONTROL.

3. Prepare SMUFD 2006 for Program SLS02.

   Forward SMUFD 2006 and CALL/DATE CARD to COMPUTER

4. Run Program SLS02.

   Forward output (ACCESSION LISTING) and SMUFD 2006 to CONTROL.

5. File SMUFD 2006.

   Burst/bind ACCESSION LISTING and forward to TECHNICAL LIBRARY.

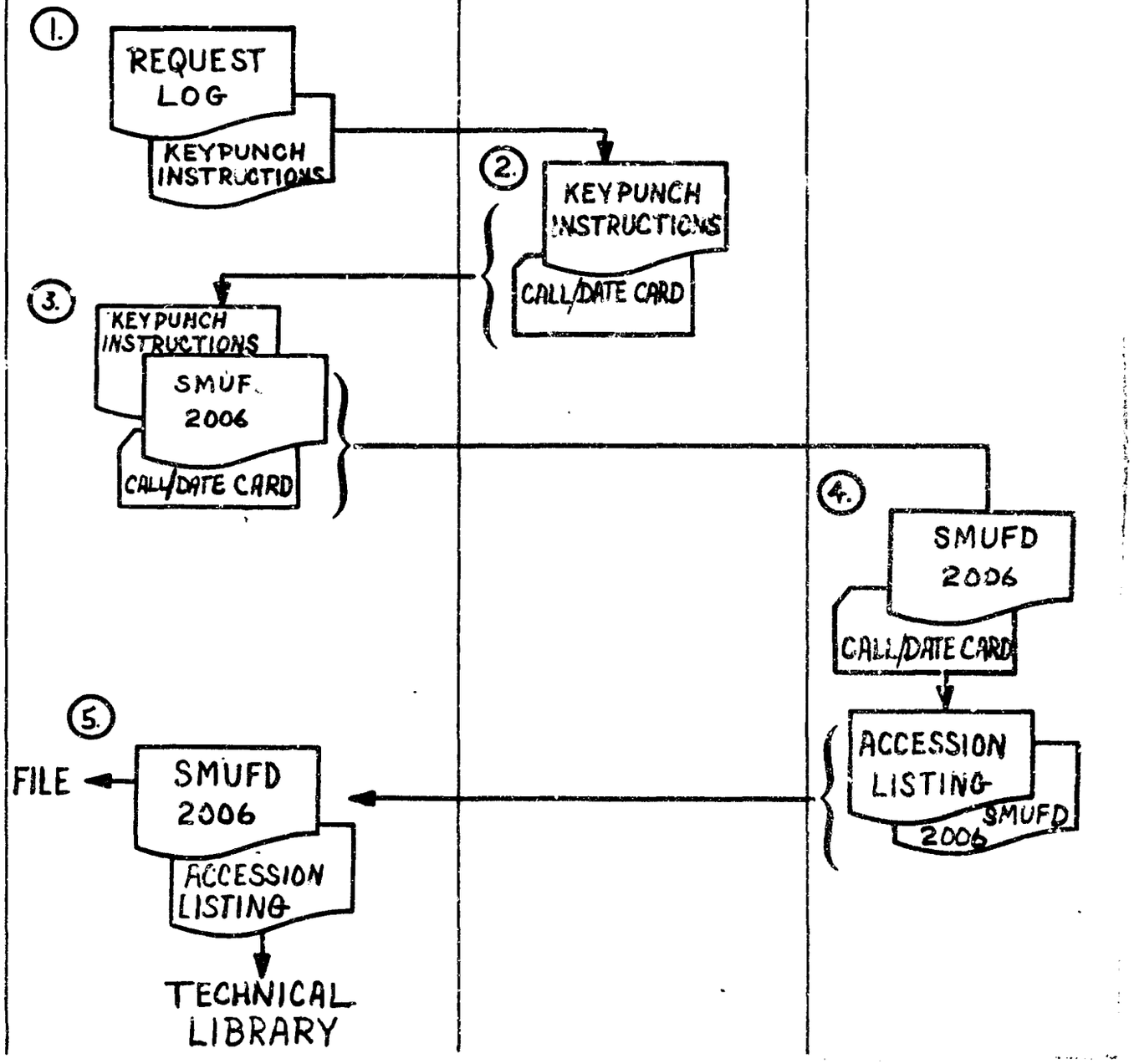

3150 OPERATING INSTRUCTIONS

MAX.TIME 20 SEQUENCE NO.

RUN ID SLS02 RUN NAME Serial Library, Accession List

REQUESTER Journal Control Room ATTEND AUTH.

COST CENTER WORK CODE STEP

FORE/BACK MSOS/OTHER MSOS

JUMP SWITCH: 1. ,2. ,3. ,4. ,5.

MAG.TAPE:

	UNIT	LUN	LABEL	REEL	RING	DISPOSITION
IN:	01		SLSOIACC	1	Out	Master File
OUT:						

CARDS:

IN: LABEL SLS02 DISPOSITION Return to Requester

OUT: LABEL DISPOSITION

DISK:

PACK NO. , , ,

PRINTER:

LABEL SLS02 FORM NO. 1413 PARTS 2 CARRIAGE TAPE Standard

PAPER TAPE:

IN: LABEL DISPOSITION

OUT: LABEL DISPOSITION

SPECIAL INSTRUCTIONS:

SMUFD FORM 2006 (Test)
(Aug 68)

HALTS:
NO.

CAUSE/CORPECTIVE ACTION

OPERATOR COMMENTS:

PROGRAM TITLE: SERIAL LIBRARY MANAGEMENT REVIEW REPORTS (SLS03)

PROGRAM OBJECTIVE:

To selectively list suppliers and the journals for which they are the source. The list will reflect title, number of copies, unit cost and total cost for each journal.

PROGRAM DESCRIPTION:

Header cards indicating title of run and suppliers are read one at a time. The master tape is searched for journals furnished by the selected supplier, as a record is found it is printed at the end of the Master Tape; another card is read for the name of the next report/ supplier.

OPERATING INSTRUCTIONS
JOURNAL CONTROL
SERIAL LIBRARY SYSTEM
PUBLISHERS' LISTS

JC-SLS03

I. CONTROL INFORMATION

A. Usual Source of Data: Fort Detrick Technical Library

B. Point of Contact: Journal Control Room

C. Data Transmittal Form: DD 1530 or DD 95

D. Frequency of Use: As required

E. Due In:

1. Day = As Required
2. Time = 1600 hours

F. Due Out:

1. Day = First work-day after Due In date
2. Time = 0800 hours

G. Estimated Run Time:

1. Maximum time of 20 minutes depending on number of reports and suppliers per report

H. Usual Priority Status: Routine

I. Security Classification: Unclassified

J. Distribution: TECH Library

Area of Responsibility			Action
Control	1.	a.	Log in Job Request and attached Card Formats
		b.	Prepare Key Punch instructions for Call/Date cards, if cards not received from Library. Forward Key Punch instructions to Key Punch
		c.	If Call cards received from Library, see instruction 3
Key Punch	2.		Key Punch Call cards per instructions. Return cards with instructions to Control
Control	3.	a.	Prepare SMUFD Form 2006 for Program SLS03
		b.	Forward SMUFD 2006 and Call/Date cards to the Computer Section
Computer	4.		Process SLS03 per SMUFD 2006 Return 2006 with Lists to Control
Control	5.		Burst Listings Log out Lists as Job Completed Forward Lists to TECH Library

WORK FLOW: SLS03 - SERIAL LIBRARY PUBLISHER LIST

ACTION	CONTROL	KEYPUNCH	COMPUTER

1. Log in request from TECHNICAL LIBRARY. Prepare keypunch instructions for CALL/DATE CARD, forward to KEYPUNCH.
2. Punch CALL/DATE CARD. Forward keypunch instructions and CALL/DATE CARD to CONTROL.
3. Prepare SMUFD 2006 for Program SLS03. Forward SMUFD 2006 and CALL/DATE CARD to COMPUTER.
4. Run Program SLS03. Forward output (PUBLISHER LISTING) and SMUFD 2006 to CONTROL
5. File SMUFD 2006. Burst/bind PUBLISHER LISTING and forward to TECHNICAL LIBRARY

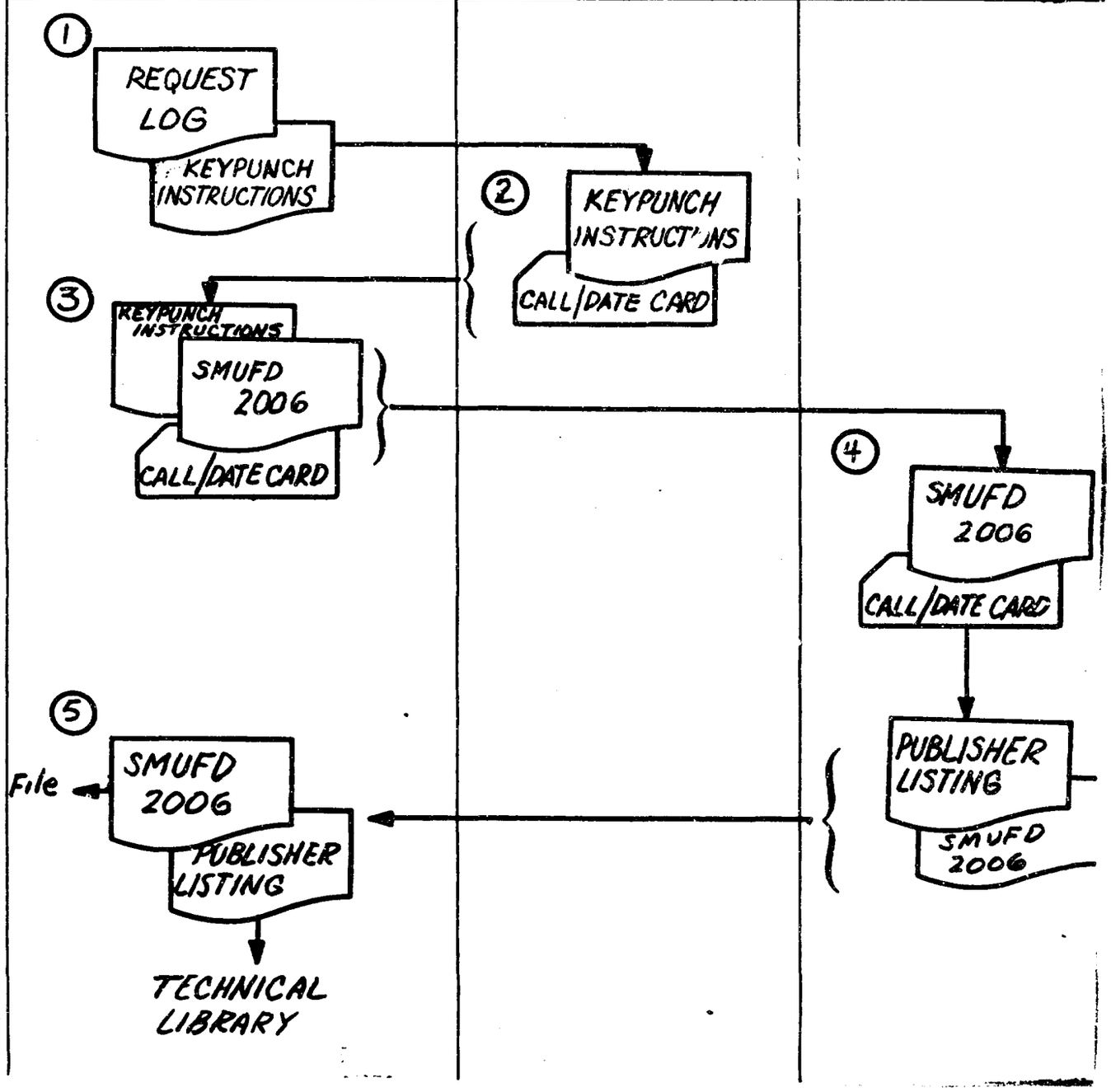

3150 OPERATING INSTRUCTIONS

MAX.TIME 20 SEQUENCE NO. _____

RUN ID SLS03 RUN NAME Selected Publishers' Lists

REQUESTER Journal Control Room ATTEND _____ AUTH. _____

COST CENTER _____ WORK CODE _____ STEP _____

FORE/BACK _____ MSOS/OTHER MSOS

JUMP SWITCH: 1. _____, 2. _____, 3. _____, 4. _____, 5. _____

MAG.TAPE:

	UNIT	LUN	LABEL	REEL	RING	DISPOSITION
IN:	01	01	SLS01MST	1	Out	Return to FILE
OUT:						

CARDS:

IN: LABEL SLS03 Call DISPOSITION Return to Requester

OUT: LABEL _____ DISPOSITION _____

DISK:

PACK NO. _____, _____, _____, _____

PRINTER:

LABEL SLS03 FORM NO. 1413 PARTS 2 CARRIAGE TAPE Standard

PAPER TAPE:

IN: LABEL _____ DISPOSITION _____

OUT: LABEL _____ DISPOSITION _____

SPECIAL INSTRUCTIONS:

SMUFD FORM 2006 (Test)
(Aug 68)

HALTS:
NO.

CAUSE/CORRECTIVE ACTION

OPERATOR COMMENTS:

PROGRAM SLS01
Date Control CD

CARD FORMAT

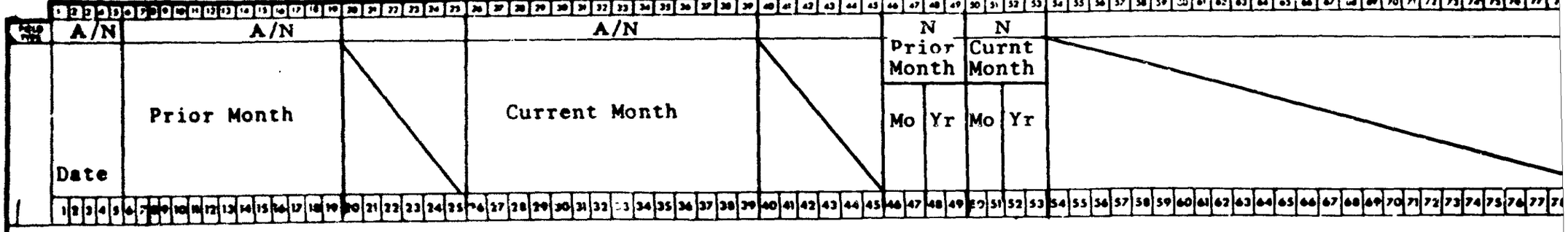

1-5 Constant "Date..."
6-19 Prior Month/Year*
26-39 Current Month/Year*
46-49 Prior Month/Year**
46-47 Month
48-49 Year
50-53 Current Month/Year**
50-51 Month
52-53 Year
54-80 Blank

*Spell out month left justified - September 1968
**Mo 01, 02, etc. Yr 68, 69, 70, etc.

Attachment 1-A

PROGRAM SLS01
Title Card (1 in 80)

CARD FORMAT

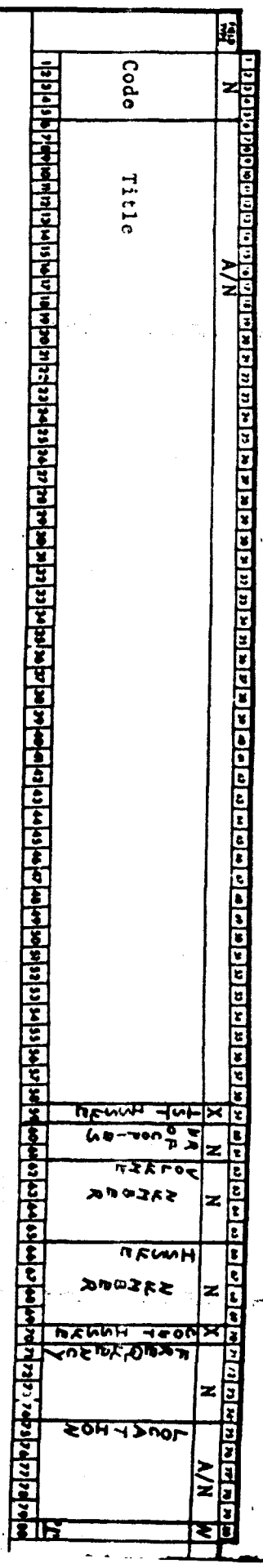

1-5	Title Code
6-58	Title of Publication
59	1st Issue Indicator: If first issue for a subscription Librarian will Punch * otherwise leave blank
60-61	Number of copies Expected/Received
62-65	Volume Number
66-69	Issue Number
70	Continuous Issue Number Indicator. (Punch * if Issue Number is not reset to 0001 when Volume Number changes.)
71-74	Frequency Weeklies have "80"; bi-weeklies have "81" and semi-monthlies have "82" punched in first two positions. "83" for those not under Card Control and "90" for unknown frequency or issued less than once a year
75-79	Location: where publication is to be filed.
80	"1" Card Code

Attachment 1-B

PROGRAM SLS01
Vendor Card 1 (2 in 80)

CARD FORMAT

TITLE

FIELD TYPE	N	A/N	A/N	
	Code	Vendor/Supplier	Street/Building Address	1

1-5	Title Code	
6-49	Vendor/Supplier Name of Company responsible for supplying publication	
50-79	Building-Suite/Street Address of Vendor	
80	"2" Card Code	

AMC FORM 1600-8

Attachment 1-C1

1-5	Title Code
6-35	Street/City - State of Vendor's address
36-65	City - State/Country of Vendor's address
66-69	Number of Issues in Volume
70-73	Number of Issued received in Volume
74	Language Punched if publication is printed in other than the English language
75	Foreign Punch 'F" if publication is published outside of the United States
76	AD-PAY Advance pay indicator
77-79	Blank
80	"3"

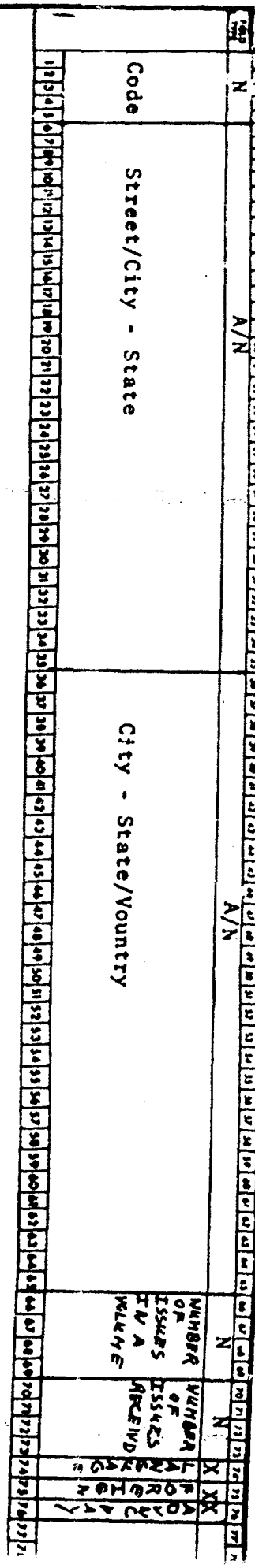

PROGRAM SLS01
TITLE Publisher Data Card (4 in 80)

CARD FORMAT

FIELD TYPE	N	A/N	A/N	A/N	N	N	A/N	W
	Code	Publisher	City in which published	Purchase order Number	Cost	RENEWAL DATE	Subject Code	

1 2 3 4 5 6 7 8 9 10 11 12 13 14 15 16 17 18 19 20 21 22 23 24 25 26 27 28 29 30 31 32 33 34 35 36 37 38 39 40 41 42 43 44 45 46 47 48 49 50 51 52 53 54 55 56 57 58 59 60 61 62 63 64 65 66 67 68 69 70 71 72 73 74 75 76 77 78 79 80

1-5	Title Code
6-25	Publisher Name of Publishing Company
26-40	City in which published
41-60	Purchase Order Number of present subscription
61-65	Cost of subscription for one copy
66-69	Renewal date
70-79	Subject Code (See Librarian)
80	"4" Card Code

AMC FORM 1600-8

Attachment 1-D

PROGRAM SLS01
Cross-Reference Card (5 in 80)

CARD FORMAT

TITLE

FIELD TYPE	Code	Cross Reference
N		A/N

1-5	Title Code
6-75	Cross-Reference Listing
76-79	Blank
80	"5" Card Code

AMC FORM 1600-R

Attachment 1-E1

PROGRAM SLS01
Issue Holding Card (6 in 80)

CARD FORMAT

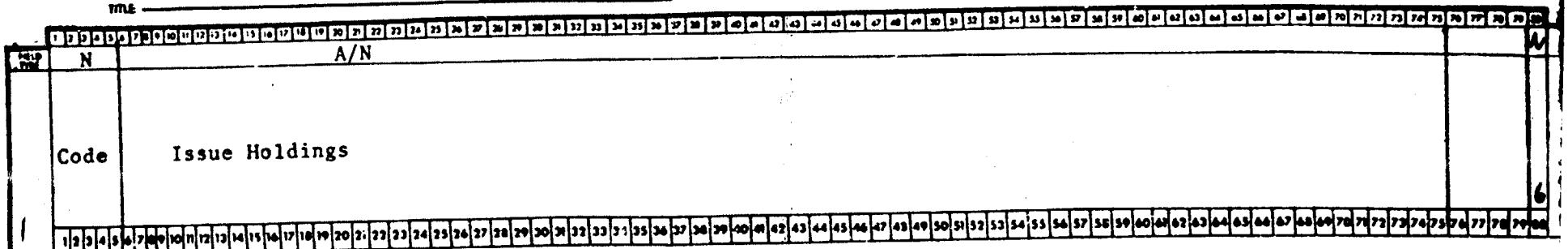

1-5 Title Code
6-75 Issue Holding
76-79 Blank
80 "6" Card Code

AMC Form 1600-8

Attachment 1-E2

1-5	Title Code
6	Route Indicator Punch * if this is to be first name to appear on routing slip for a copy of referenced Publication
7-9	Sequence Number To indicate the sequence in which this copy of document is to be distributed
10-39	Name of person to receive document
40-59	Division where person works
60-79	Location of Division
80	"9" Card Code

PROGRAM SLS01
Route Card (9 in 80)

CARD FORMAT

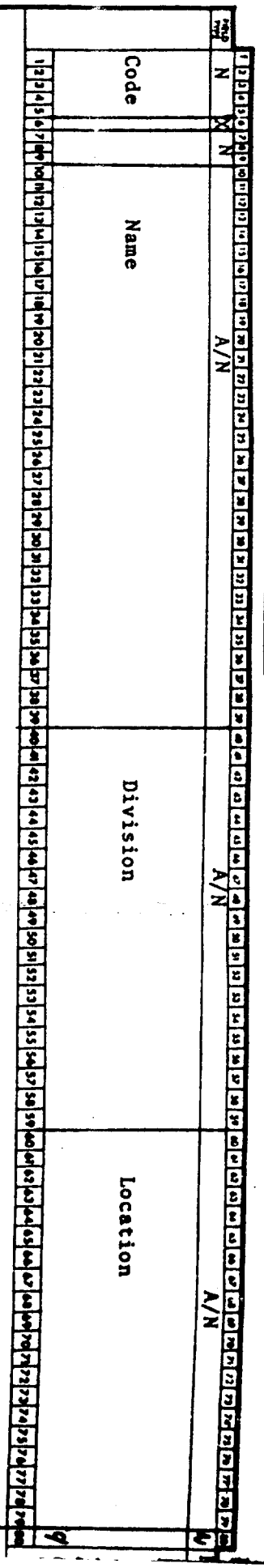

Attachment 1-F

PROGRAM SLS01
Accession Delete Card (7 in 80)

FILE

CARD FORMAT

FIELD TYPE	N		N			N	
			Start			Stop	
	Code		Vol	Iss		Vol	Iss
	1 2 3 4 5	6 7 8 9 10 11 12 13			14 15	16 17 18 19 20 21 22	23 24 25 26 27 28 29 30 31 32 33 34 35 36 37 38 39 40 41 42 43 44 45 46 47 48 49 50 51 52 53 54 55 56 57 58 59 60 61 62 63 64 65 66 67 68 69 70 71 72 73 74 75 76 77

AMC FORM 1600-R
28 DEC 67

Attachment 1-G

PROGRAM SLS02

CARD FORMAT

TITLE First/Last Accession Control Card

1-5	6	7-20	21-80
A/N		A/N	
FIRST		DATE	

1-5	Constant "FIRST" will cause only first and last items to be listed
6	Blank
7-20	DATE to reflect Month and Year, i.e., September 1968
21-80	Blank

AMC FORM 1600-R 20 DEC 67

Attachment 2

PROGRAM SLS02
All Accession Request - Control Card

CARD FORMAT

TITLE

FIELD TYPE	A/N		A/N
	ALL		DATE

1-3 Constant "ALL" will cause ALL Accessions to be listed

4 Blank

5-18 DATE to reflect Month and Year, i.e., October 1968

19-80 Blank

AMC FORM 1600-R

PROGRAM SLS03

Report Title Card - Control Card 1

CARD FORMAT

TITLE

FIELD TYPE	A/N	A/N	A/N
	TITLES	Title	Date

1 2 3 4 5 6 7 8 9 10 11 12 13 14 15 16 17 18 19 20 21 22 23 24 25 26 27 28 29 30 31 32 33 34 35 36 37 38 39 40 41 42 43 44 45 46 47 48 49 50 51 52 53 54 55 56 57 58 59 60 61 62 63 64 65 66 67 68 69 70 71 72 73 74 75 76 77 78

1-7	Constant "TITLES"
8	Blank
9-52	Title of Report to be Produced: "Supplier's List" "Request for Quotation List" "Order for Supplies/Services List" "Requisition and Invoice/Shipping List"
53-69	DATE, i.e., 18 September 1968
70-80	Blank

AMC FORM 1600-R
20 DEC 67

Attachment 4

PROGRAM SLS03
Vendor Name Card - Control Card 2

CARD FORMAT

FIELD TYPE	A/N	A/N
	VENDOR	Vendor's Name

1-7	Constant VENDOR"
8	Blank
9-52	Vendor's Name
53-80	Blank

AMC FORM 1600-8

Attachment 5

MEDIA: Tape/DISK
TITLE: Use by Programs SLS01 and SLS03

DATA PROCESSING STORAGE FORMAT

BIT / FIELD TYPE	N	A/N	N	N	N	N	N	A/N	A/N	N	N	A/N
DATA	Title Code (5)	Title (53)	1ST ISSUE	NR OF COPIES	VOLUME NUMBER	ISSUE NUMBER	CONT ISSUE	FREQUENCY	LOCATION	NUMBER OF ISSUES IN VOLUME	NUMBER OF ISSUES RECEIVED	Vendor

BIT / FIELD TYPE		A/N	A/N	A/N
DATA	Vendor (continued)	ADRS-2	ADRS-3	ADRS-4

BIT / FIELD TYPE		X	X	X	A/N	A/N	A/N	N	N	A/N
DATA	ADRS-4 (continued)	LANGUAGE	FOREIGN	ADVNC PAY	Publisher	City of Publication	Purchase Order Number	Cost		Subject Code

BIT / FIELD TYPE	A/N	A/N
DATA	Cross-Reference (continued	Issue Holdings

FILE NAME: Publication Master File (PUB-MST-FL) (PUB-MST-WK)
RECORD LENGTH: 446
BLOCKING FACTOR: 1

MEDIA:
TITLE:

DATA PROCESSING STORAGE FORMAT

BIT			
FIELD TYPE	A/N	A/N	
DATA	ISSUE HOLDING (continued)	Expect Volume Issue	

BIT	
FIELD TYPE	
DATA	

BIT	
FIELD TYPE	
DATA	

BIT	
FIELD TYPE	
DATA	

FILE NAME: Publication Master File (continued)
RECORD LENGTH: 446
BLOCKING FACTOR: 1

MEDIA: tape/DISK
TITLE: Used by Program SL501

DATA PROCESSING STORAGE FORMAT

BIT							
FIELD TYPE	N	N	A/N	A/N	A/N		
DATA	Title Code	SEQUENCE NUMBER	Name	Division	Bldg		

BIT	
FIELD TYPE	
DATA	

BIT	
FIELD TYPE	
DATA	

BIT	
FIELD TYPE	
DATA	

FILE NAME: ROUT-FL File
RECORD LENGTH: 79
BLOCKING FACTOR: 6

1601.8

MEDIA: Tape
TITLE: Used by Programs SLS01 and SLS02

DATA PROCESSING STORAGE FORMAT

BIT										
FIELD TYPE	N	A/N	N	N	N	N	N	N	A/N	A/N
DATA	Title Code	Title	MST FLAG	NR OF COPIES	VOLUME NUMBER	ISSUE NUMBER	CONT ISSUE	FREQUENCY	LOCATION	Cross-Reference

BIT		
FIELD TYPE	A/N	A/N
DATA	Cross-Reference (continued)	Issue Holding

BIT		
FIELD TYPE	A/N	
DATA	Issue Holding (continued)	

BIT	
FIELD TYPE	
DATA	

1601.R

FILE NAME: Accession File
RECORD LENGTH: 220
BLOCKING FACTOR: 10

OFFICE SYMBOL _____

SYSTEM CHART NO. _____

RUN NUMBER SYSTEM FLOWCHART

PAGE NUMBER 1 OF 1

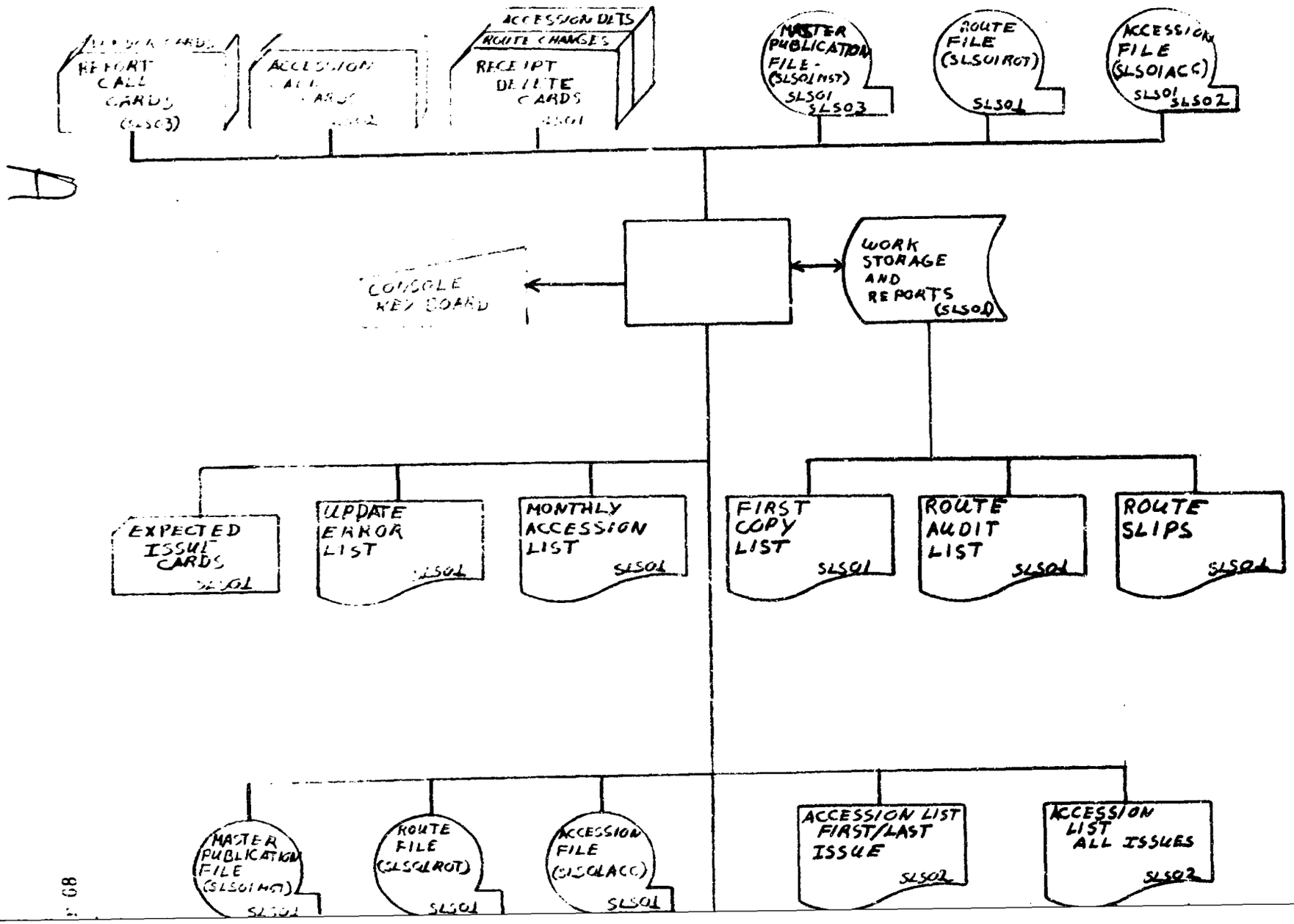

08

B

SMUFD FORM 2072-1 (Temp) Mar 68

OFFICE SYMBOL
SYSTEM CHART NO.
RUN NUMBER SLSOL
PAGE NUMBER 1 OF 44

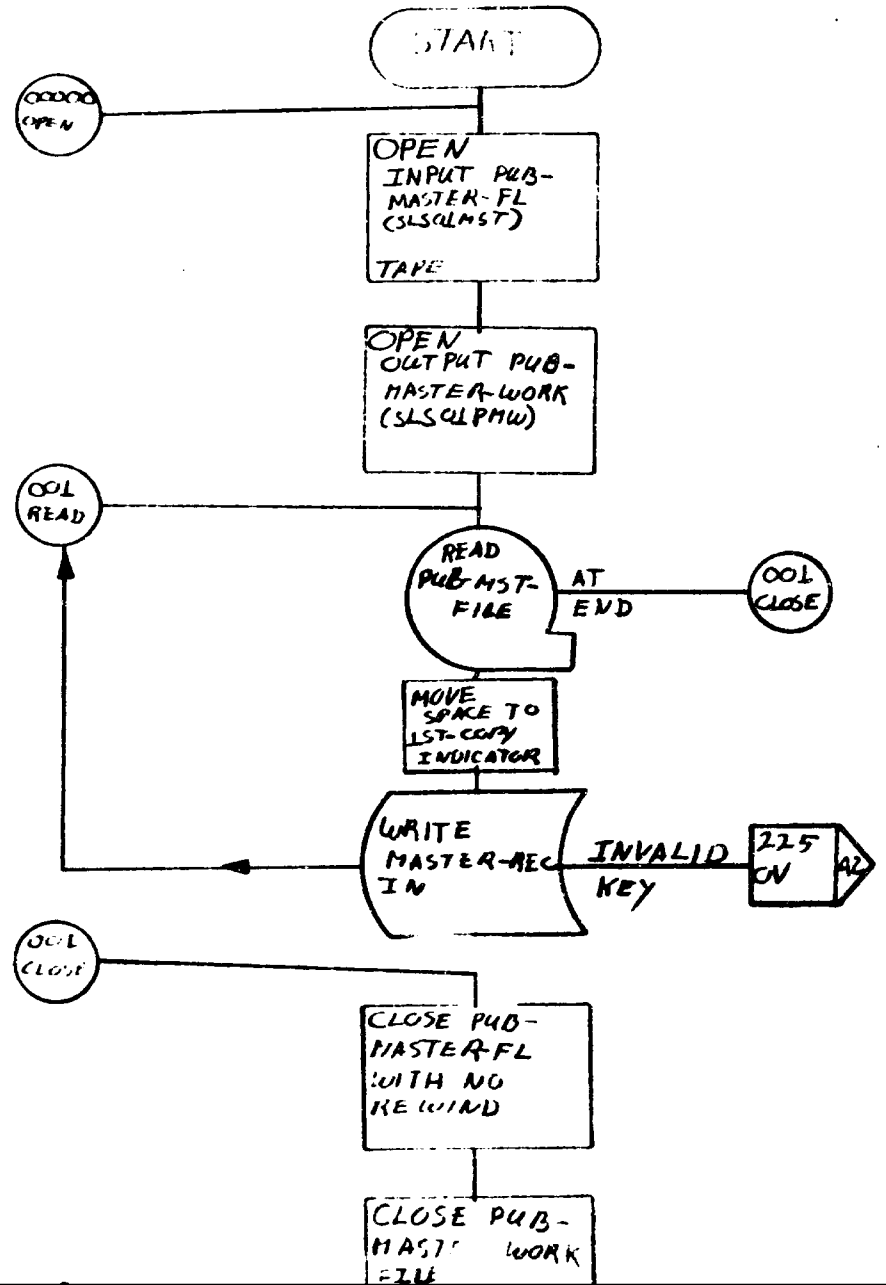

68

SMUFD FORM 2072-1 (T...pl) Mar 68

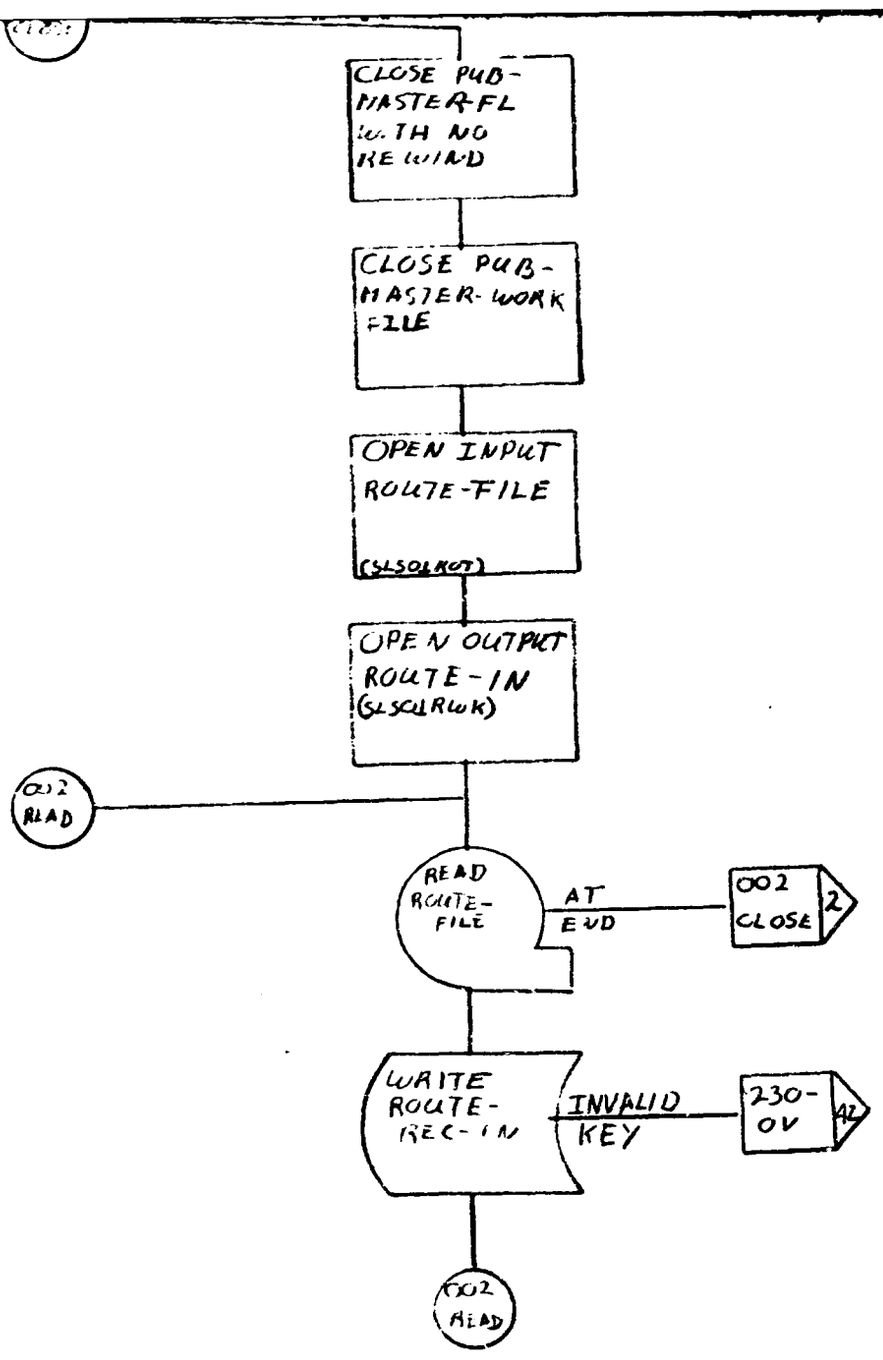

OFFICE SYMBOL _____
SYSTEM CHART NO. _____
RUN NUMBER SLS01
PAGE NUMBER 2 OF 44

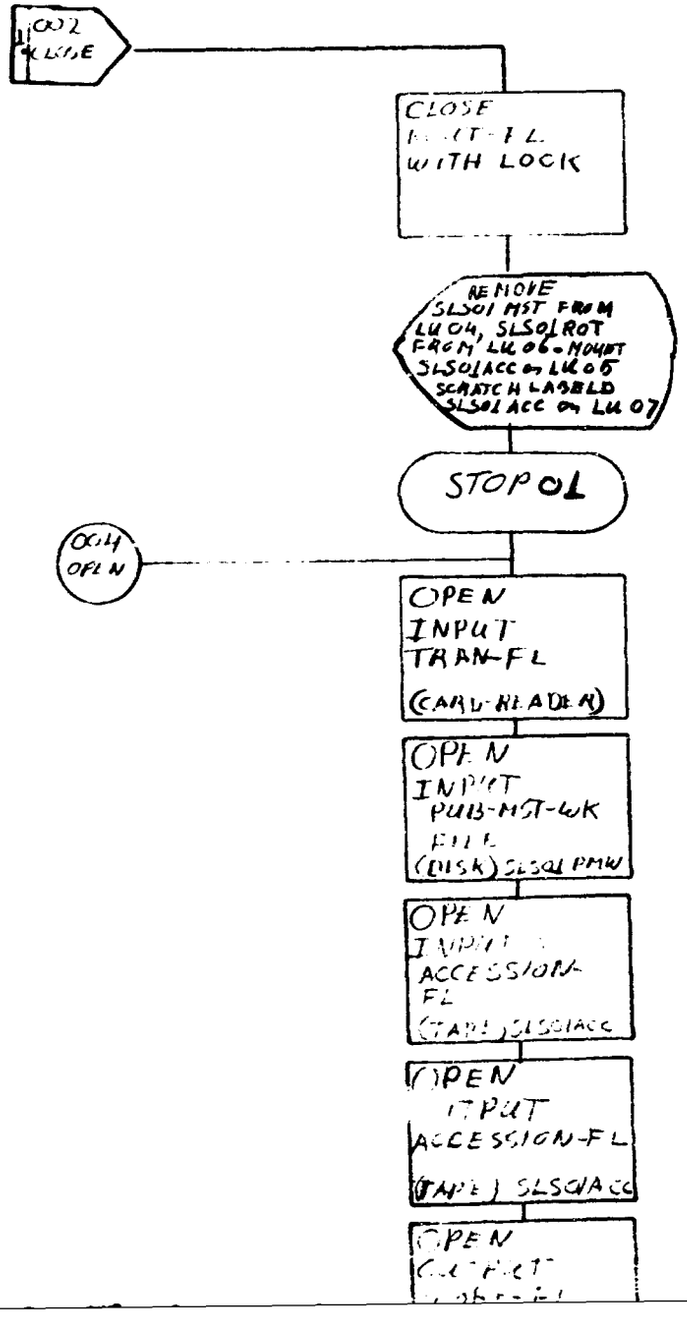

SMUFD FORM 2072-1 (Temp) Mar 68

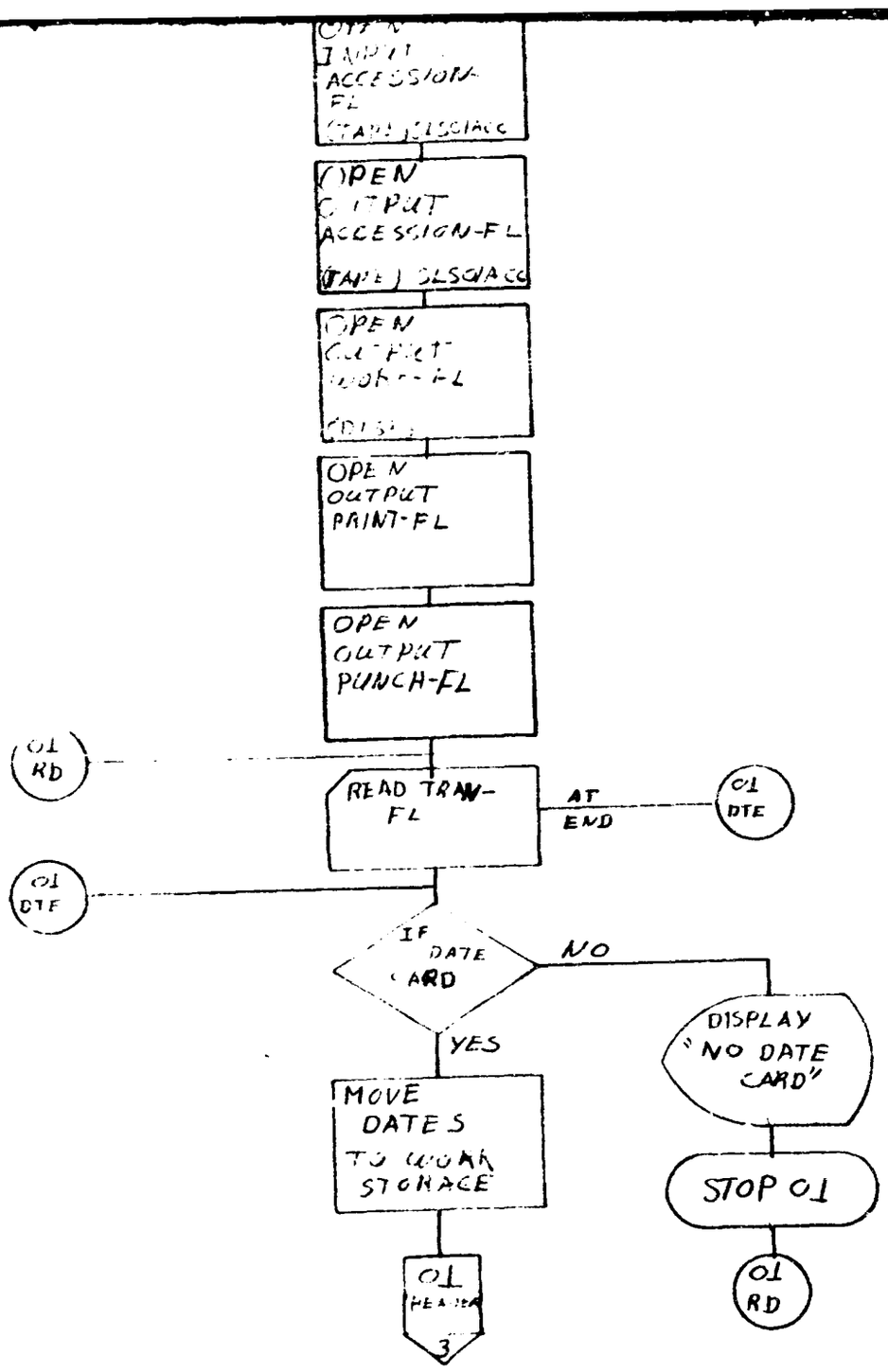

OFFICE SYMBOL
SYSTEM CHART NO.
RUN NUMBER SLS01
PAGE NUMBER 3 OF 44

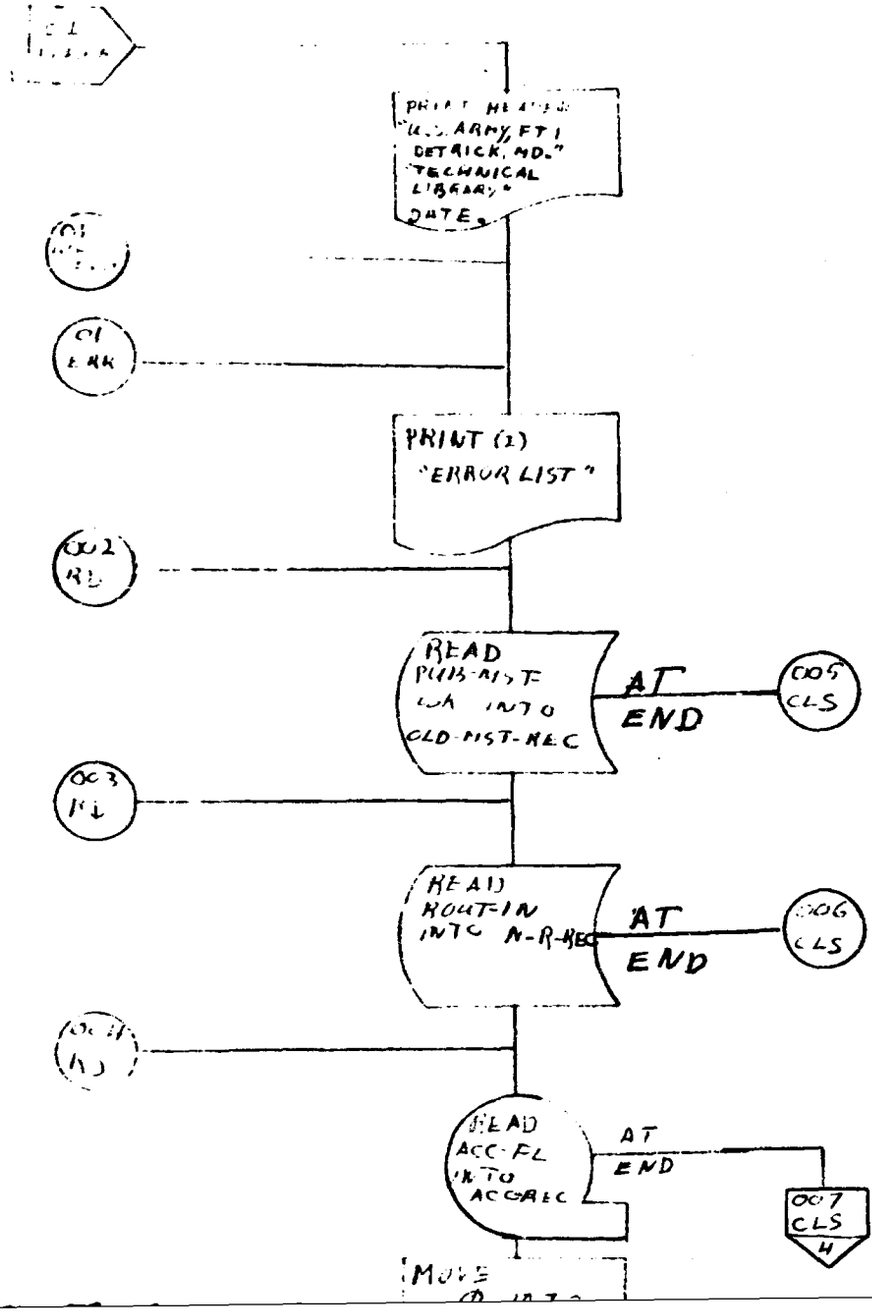

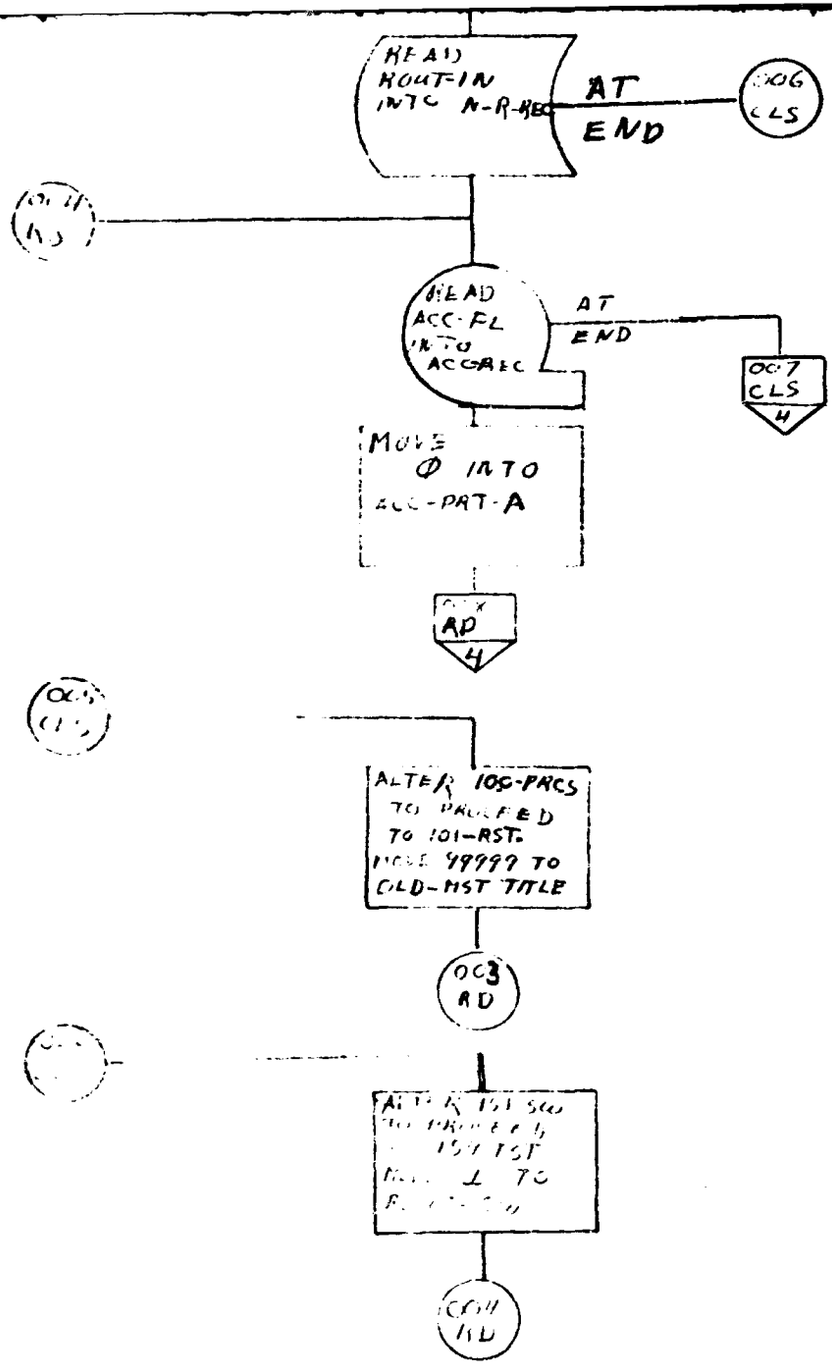
READ
ROUT-IN
INTO N-R-REC
AT
END
006
CLS
READ
ACC-FL
INTO
ACC-REC
AT
END
007
CLS
4
MOVE
Ø INTO
ACC-PAT-A
AD
4
ALTER 105-PARS
TO PROCEED
TO 101-RST.
MOVE 99999 TO
OLD-MST TITLE
003
RD
COM
RD

OFFICE SYMBOL _____
SYSTEM CHART NO. _____
RUN NUMBER SLS01
PAGE NUMBER 4 OF 44

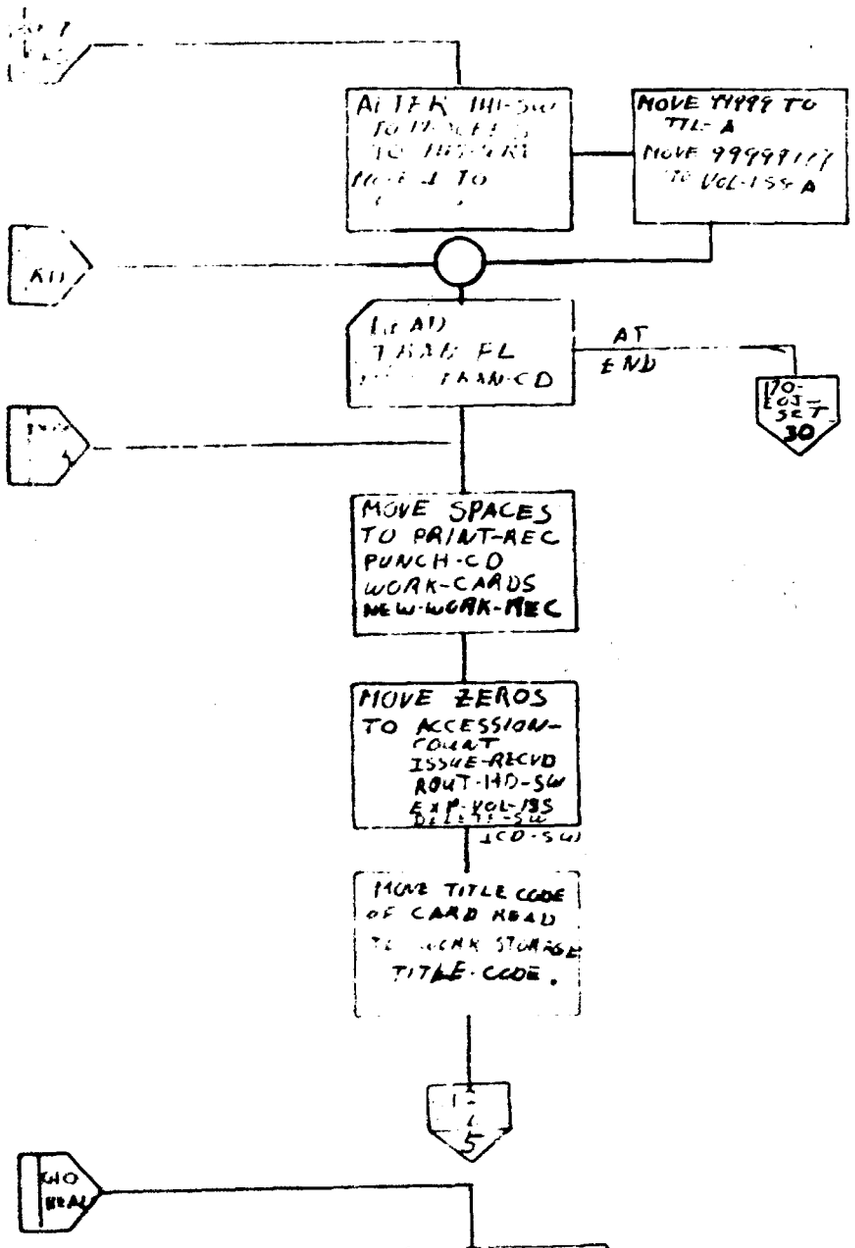

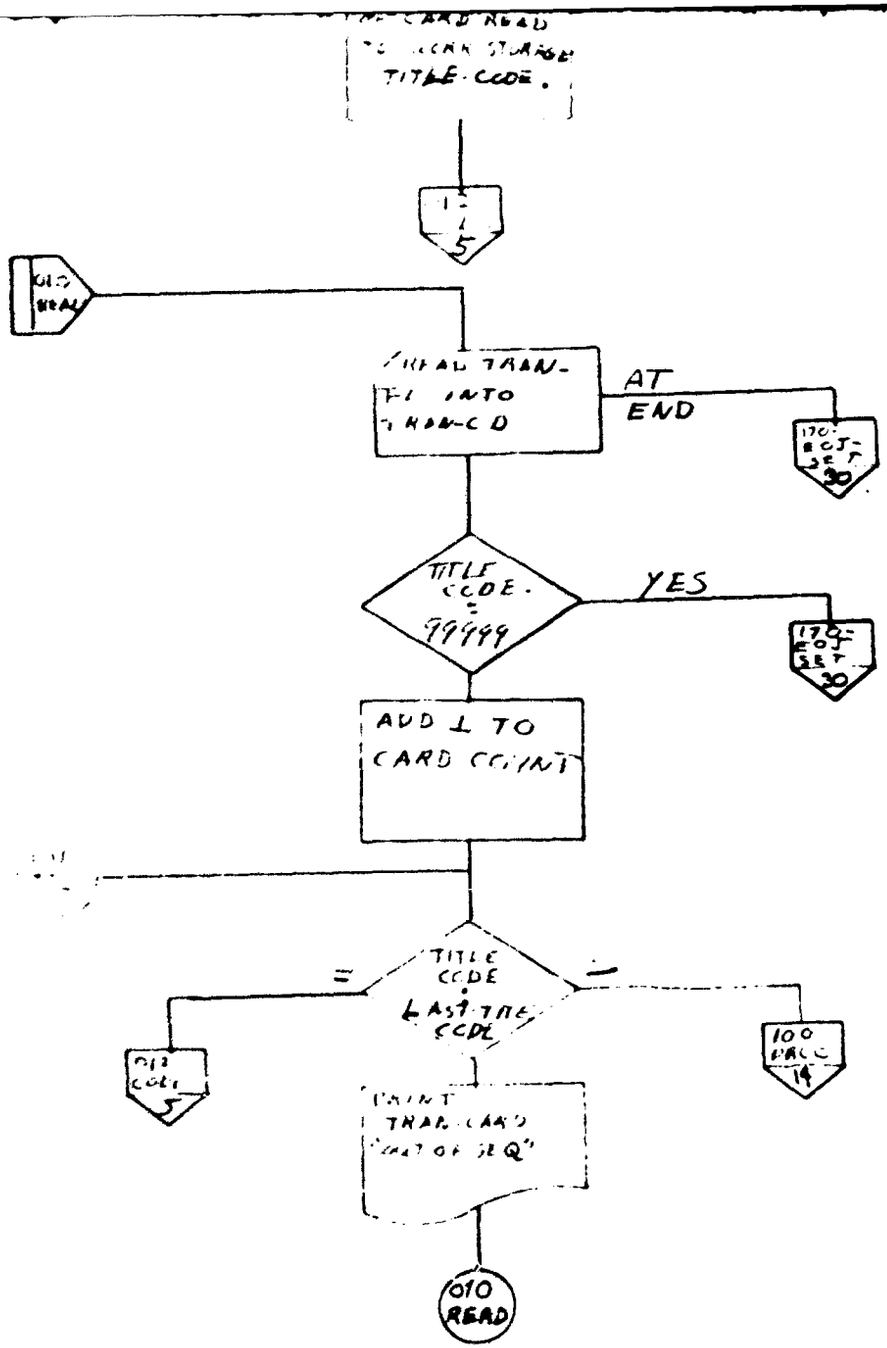

SMUFD FORM 2072-1 (Temp) May 68

OFFICE SYMBOL
SYSTEM CHART NO.
RUN NUMBER SL301
PAGE NUMBER 5 OF 44

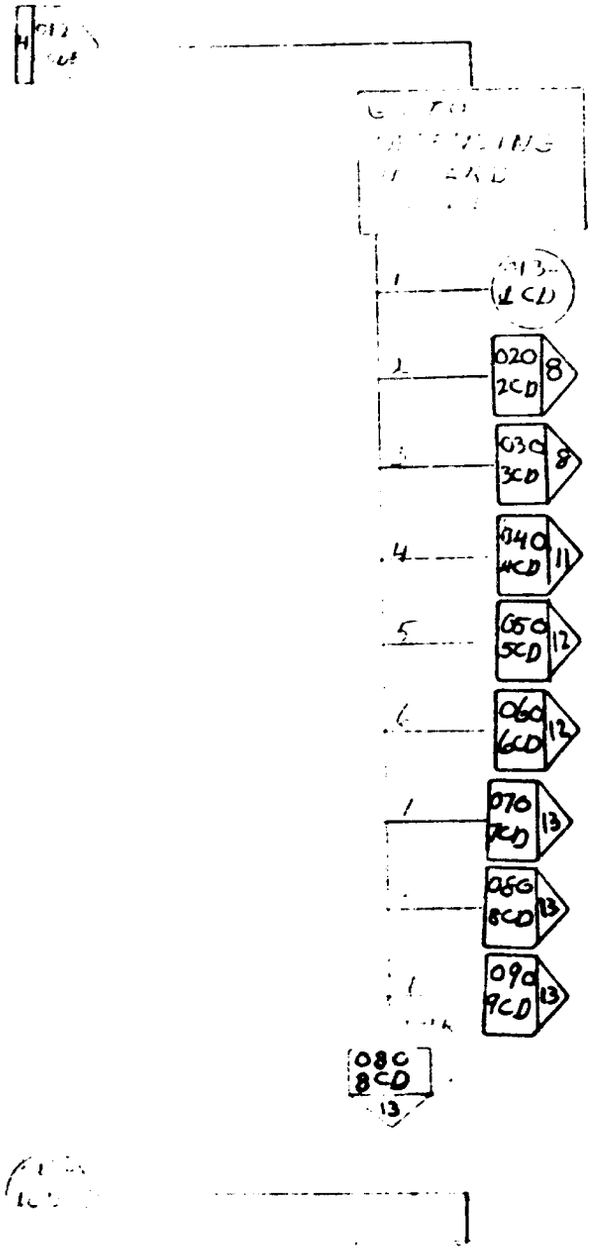

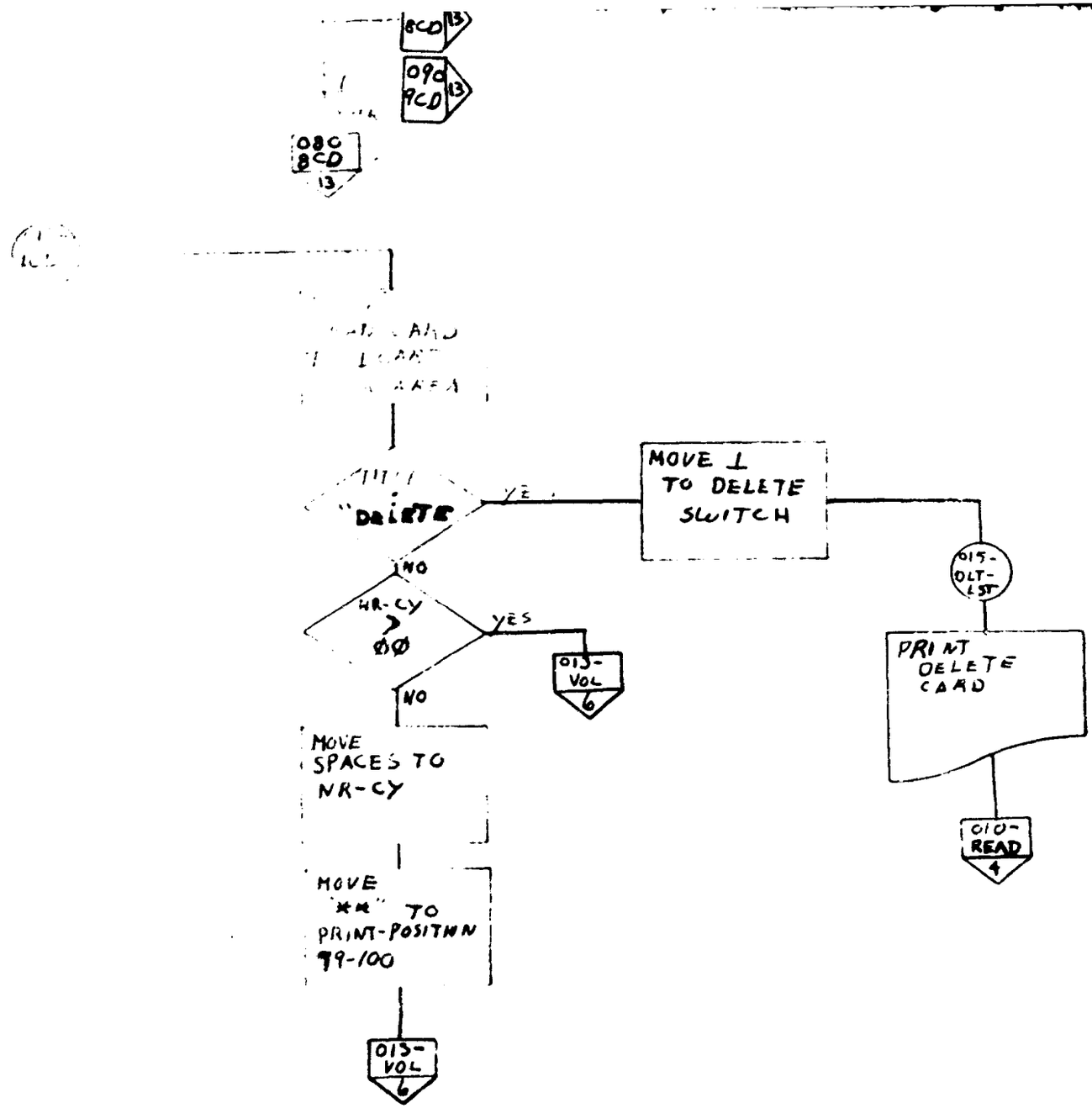

SMUFD FORM 2072-1 (Temp) Mar 68

B

OFFICE SYMBOL
SYSTEM CHART NO.
RUN NUMBER SL501
PAGE NUMBER 6 OF 44

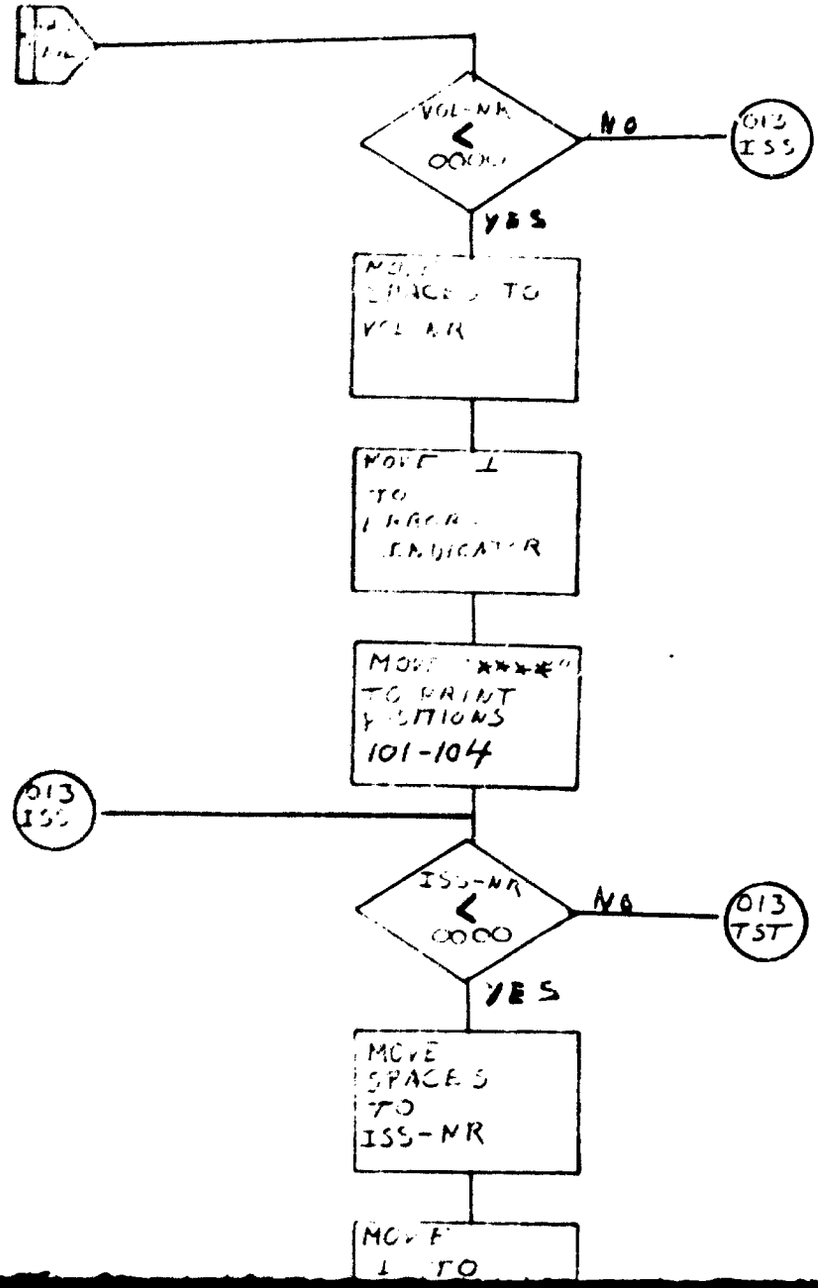

SMUFD FORM 2072-1 (T...p) Mar 68

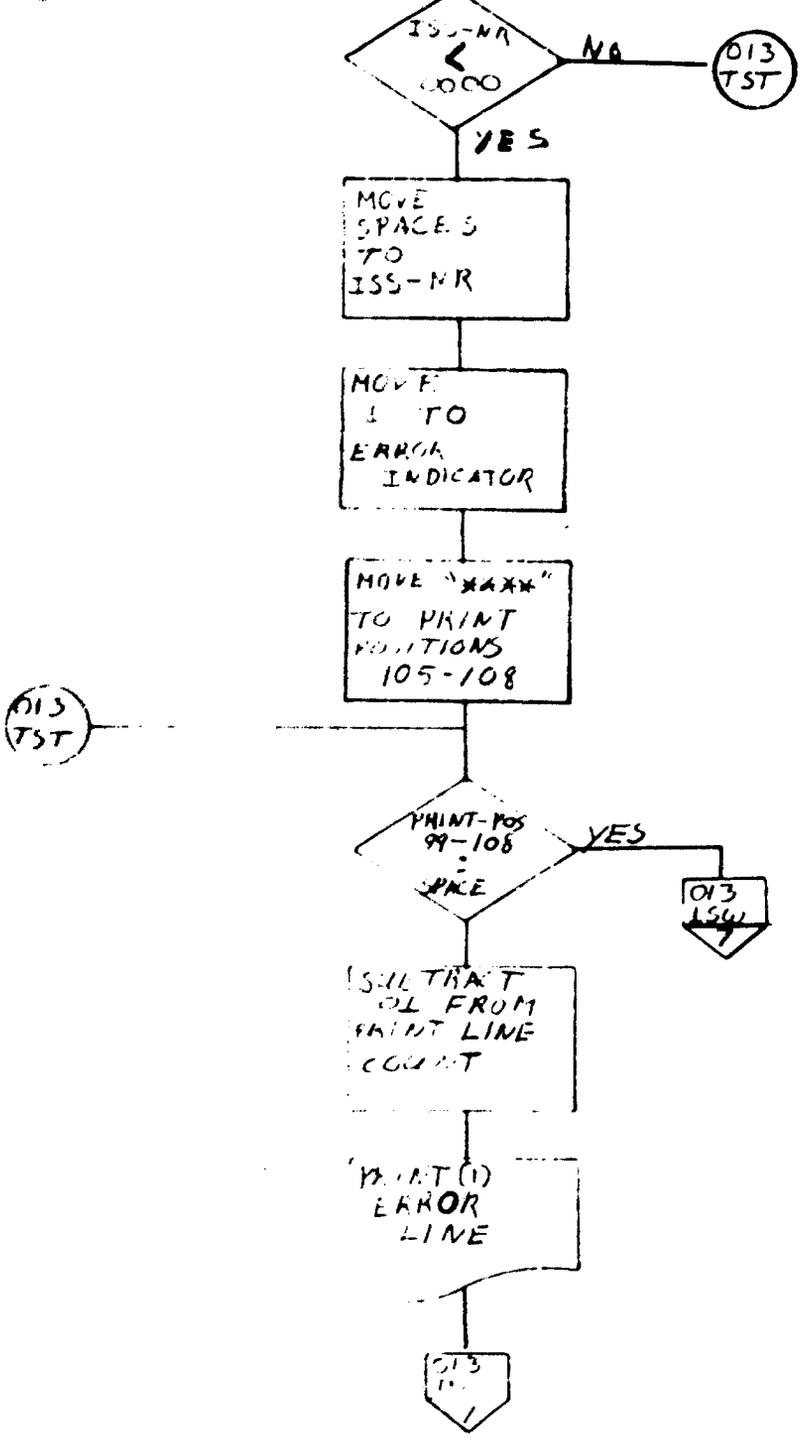

OFFICE SYMBOL
SYSTEM CHART NO.
RUN NUMBER S.S01
PAGE NUMBER 7 OF 44

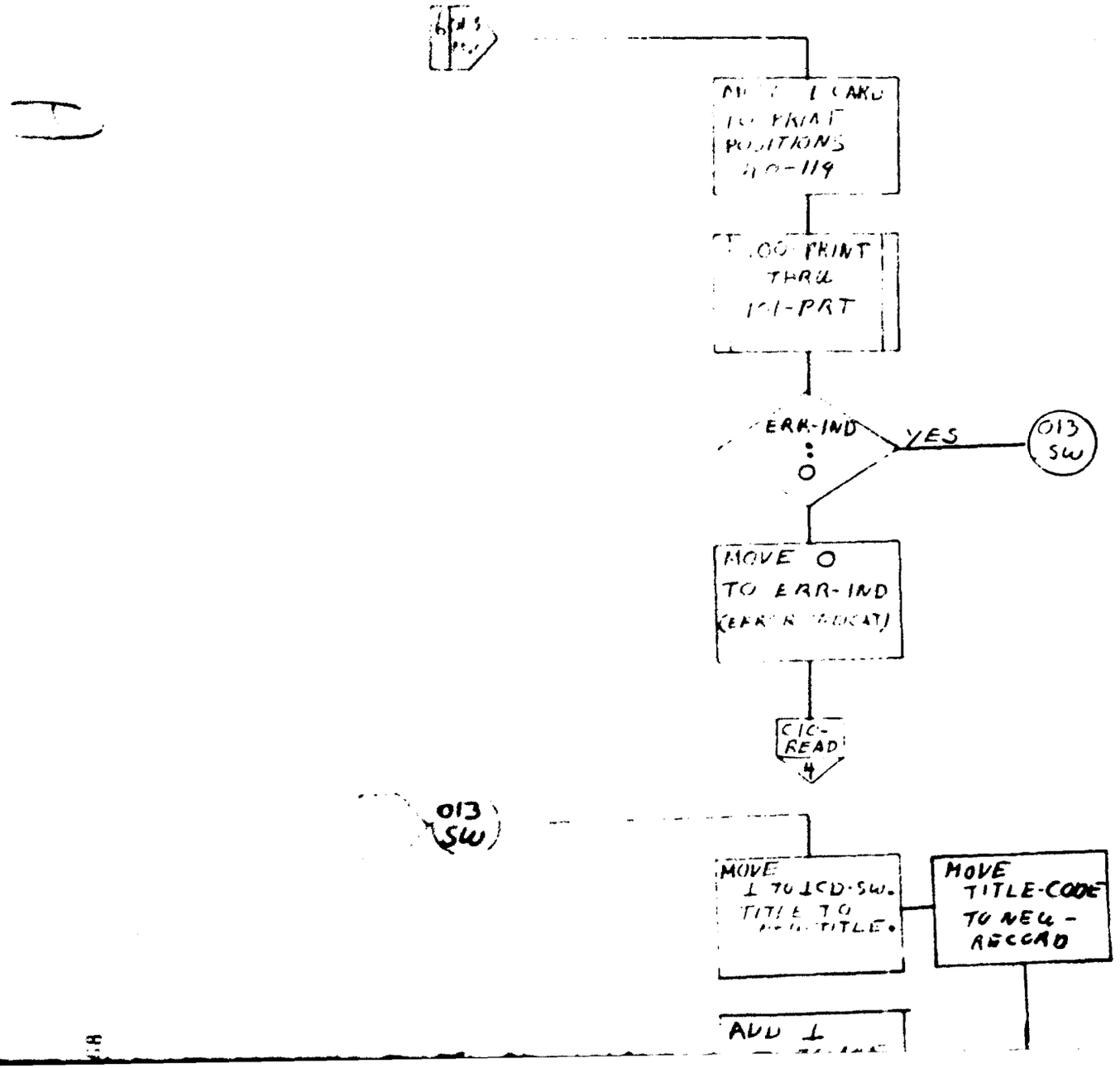

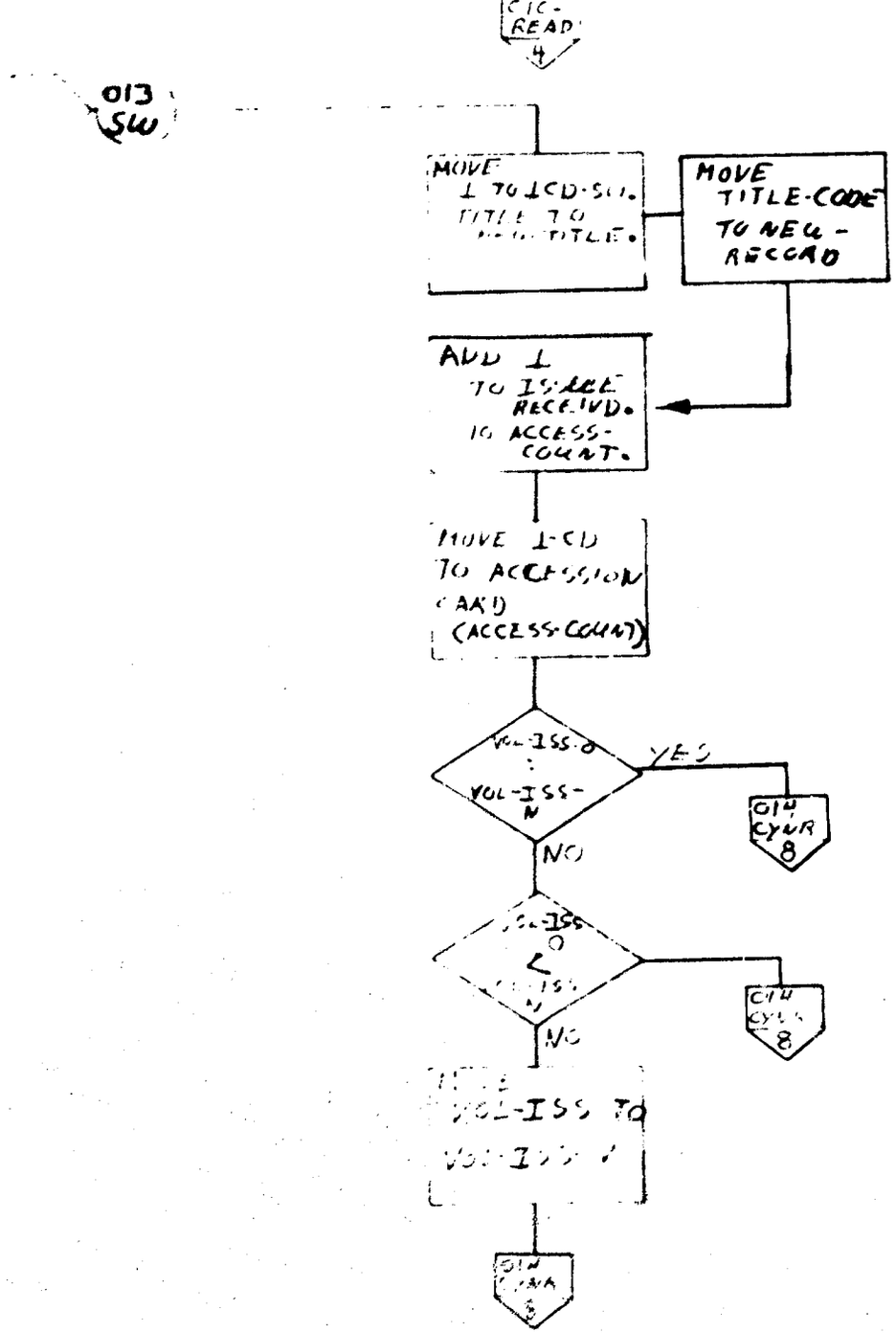

SMUFD FORM 2072-1 (T[illegible]p) Mar 68

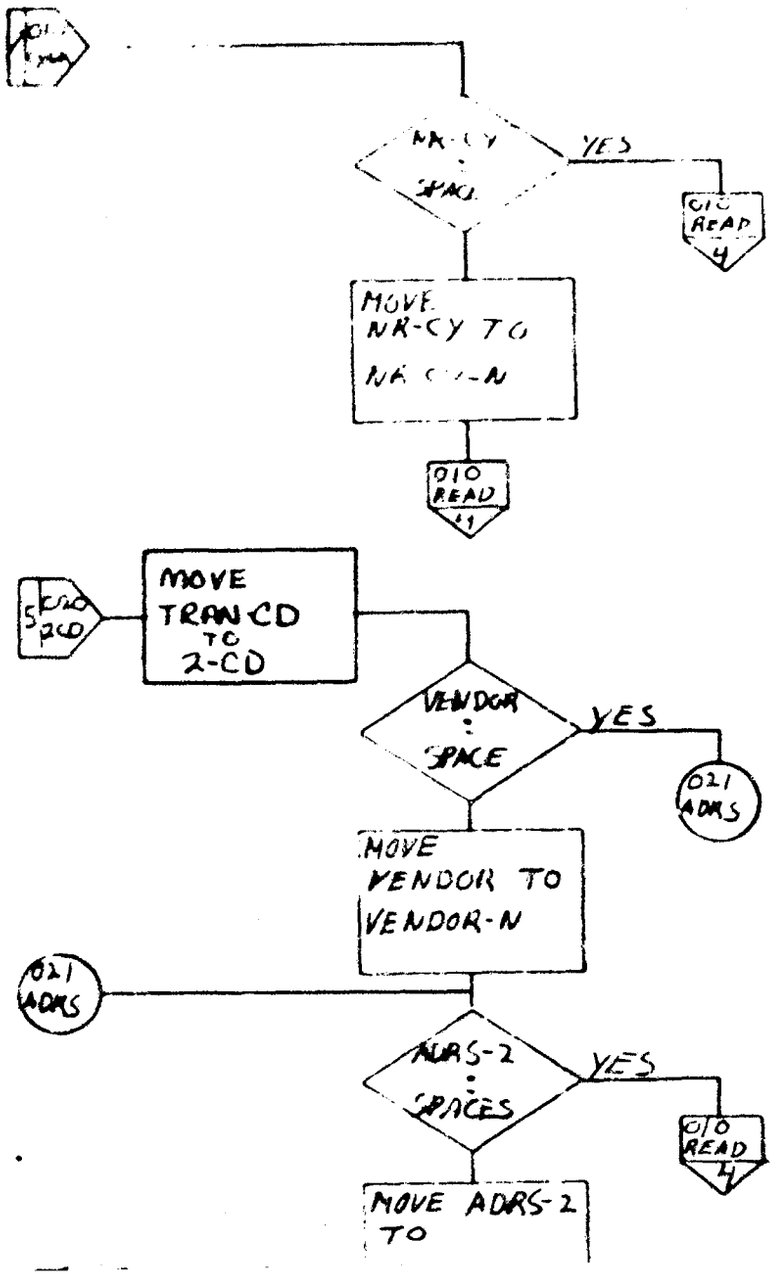
NR-CY
SPACE
YES
010 READ 4
MOVE NR-CY TO NR-CY-N
010 READ 4
MOVE TRAN CD TO 2-CD
VENDOR
SPACE
YES
021 ADRS
MOVE VENDOR TO VENDOR-N
021 ADRS
ADRS-2
SPACES
YES
010 READ 4
MOVE ADRS-2 TO

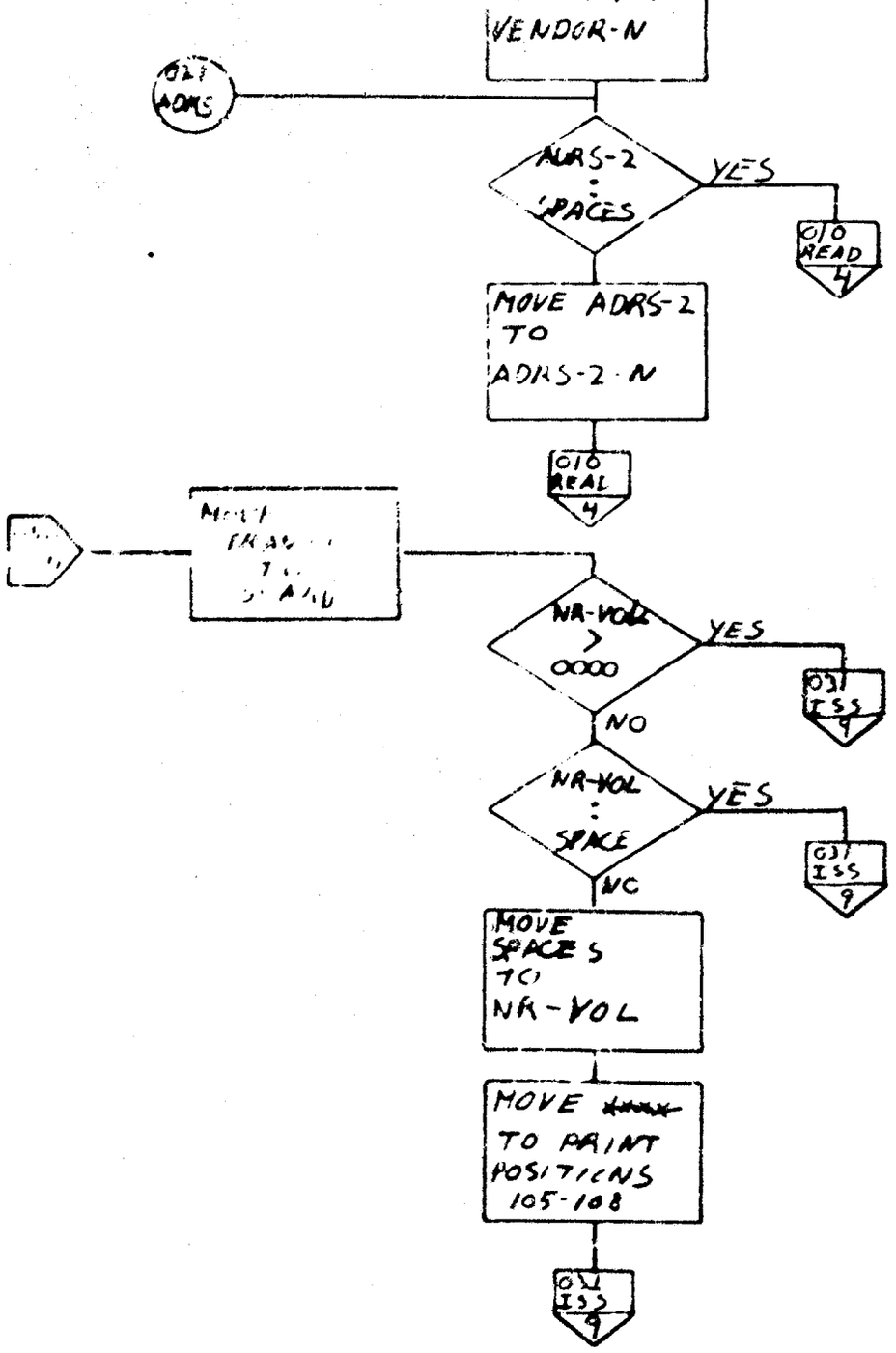

SMUFD FORM 2072-1 (T-[illegible]p) Mar 68

OFFICE SYMBOL
SYSTEM CHART NO.
RUN NUMBER SL501
PAGE NUMBER 9 OF 44

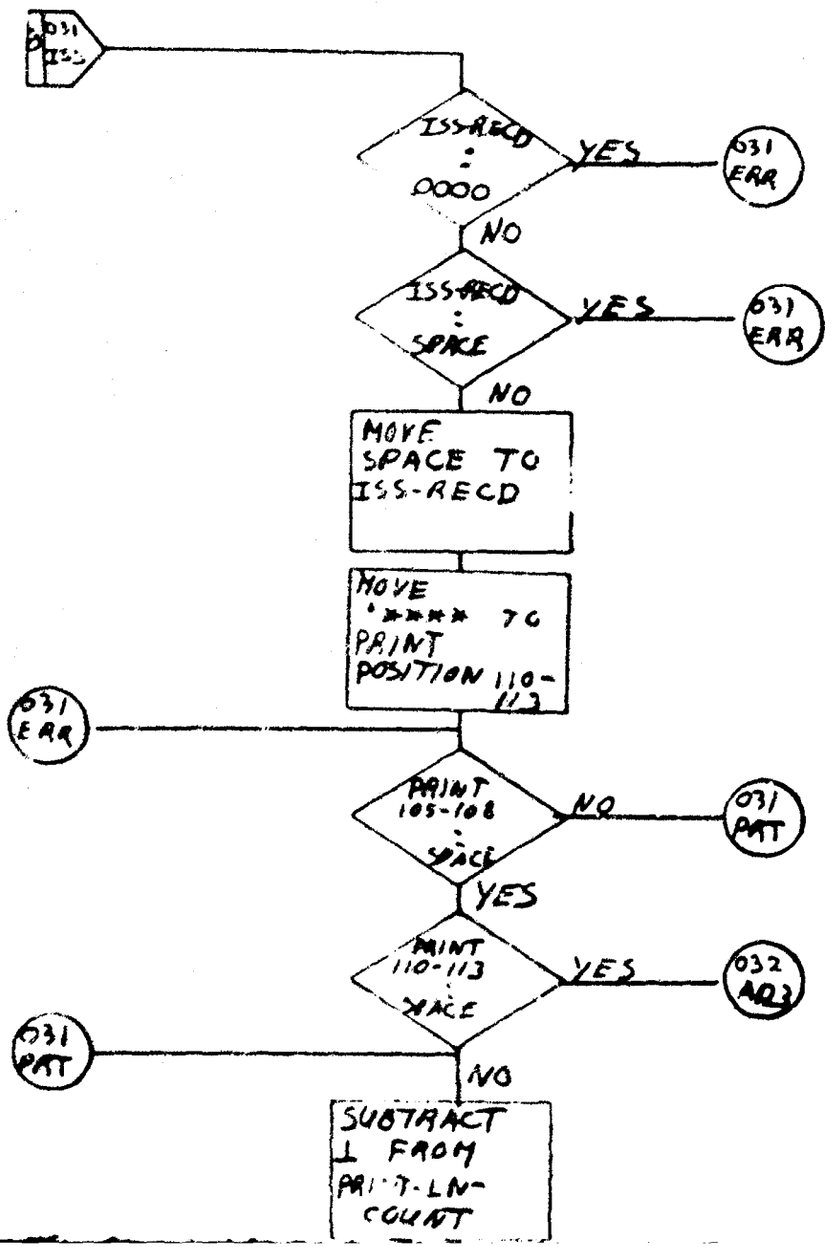

SMUFD FORM 2072-1 (T...pl Mar 68

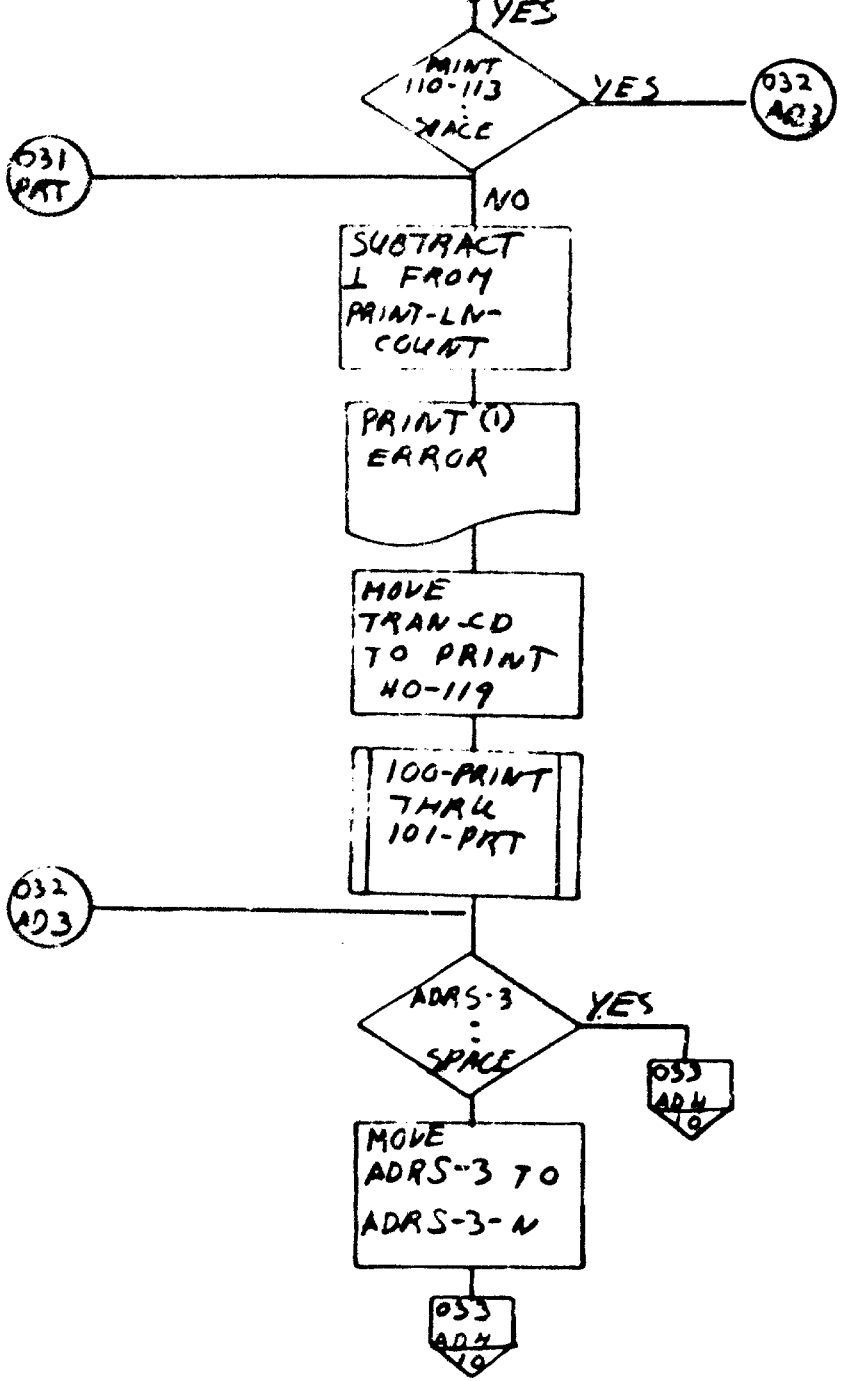

OFFICE SYMBOL
SYSTEM CHART NO.
RUN NUMBER SLS01
PAGE NUMBER 10 OF 44

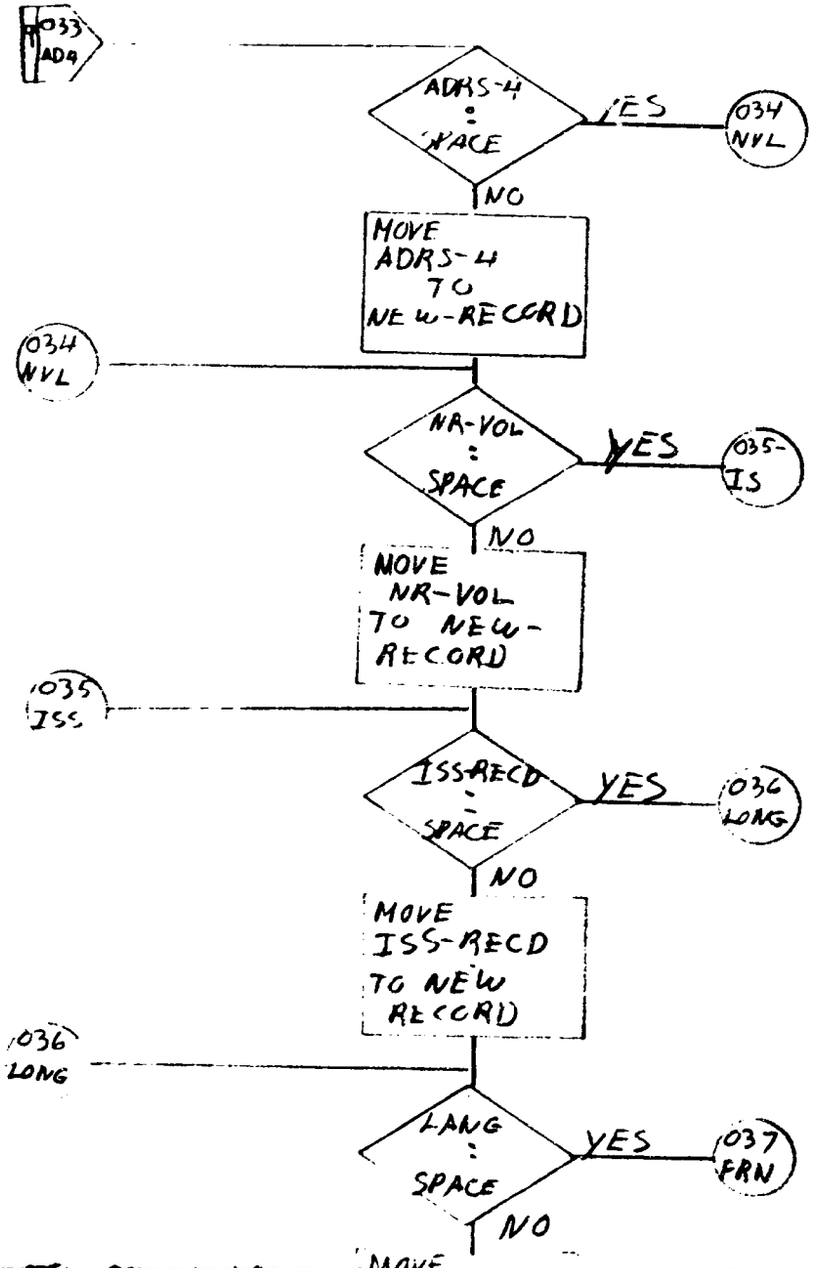

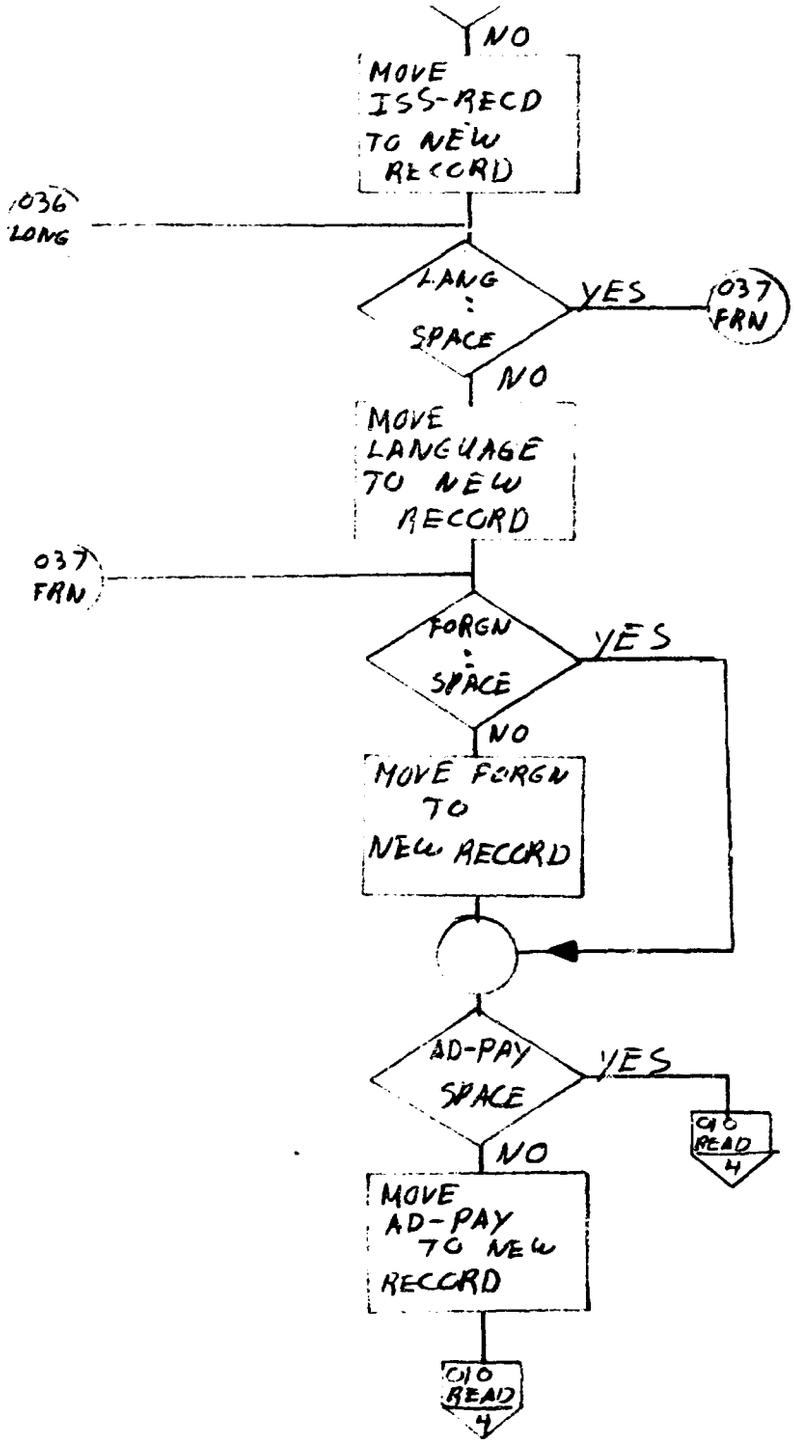
NO
MOVE ISS-RECD TO NEW RECORD
1036 LONG
LANG = SPACE
YES
037 FRN
NO
MOVE LANGUAGE TO NEW RECORD
037 FRN
FORGN = SPACE
YES
NO
MOVE FORGN TO NEW RECORD
AD-PAY SPACE
YES
010 READ 4
NO
MOVE AD-PAY TO NEW RECORD
010 READ 4

OFFICE SYMBOL _____
SYSTEM CHART NO. _____
RUN NUMBER SL501
PAGE NUMBER 11 OF 44

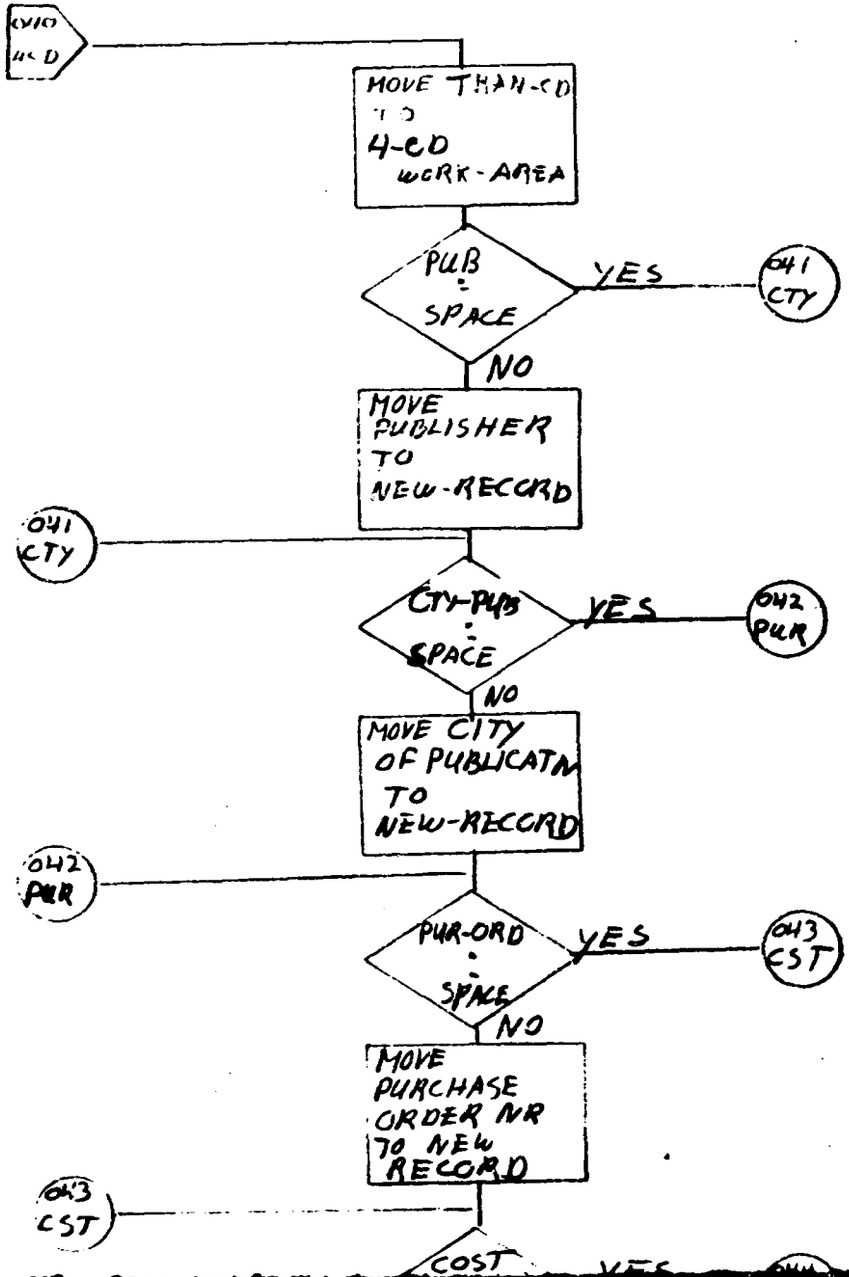

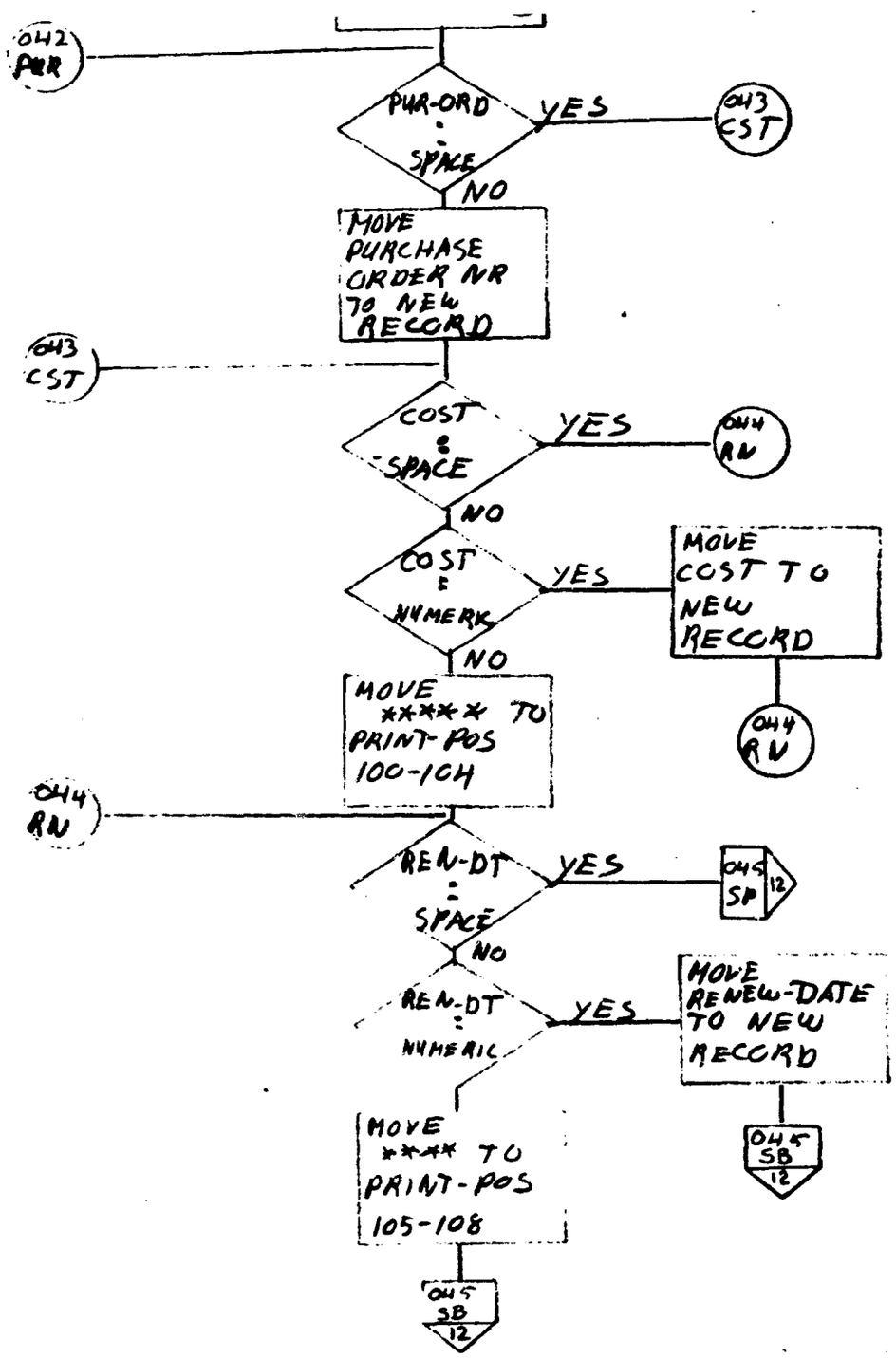
042 PUR
PUR-ORD = SPACE
YES
043 CST
NO
MOVE PURCHASE ORDER NR TO NEW RECORD
043 CST
COST = SPACE
YES
044 RN
NO
COST = NUMERK
YES
MOVE COST TO NEW RECORD
044 RN
NO
MOVE ***** TO PRINT-POS 100-104
044 RN
REN-DT = SPACE
YES
044 SP 12
NO
REN-DT = NUMERIC
YES
MOVE RENEW-DATE TO NEW RECORD
044 SB 12
MOVE **** TO PRINT-POS 105-108
045 SB 12

OFFICE SYMBOL
SYSTEM CHART NO.
RUN NUMBER SLS01
PAGE NUMBER 12 OF 44

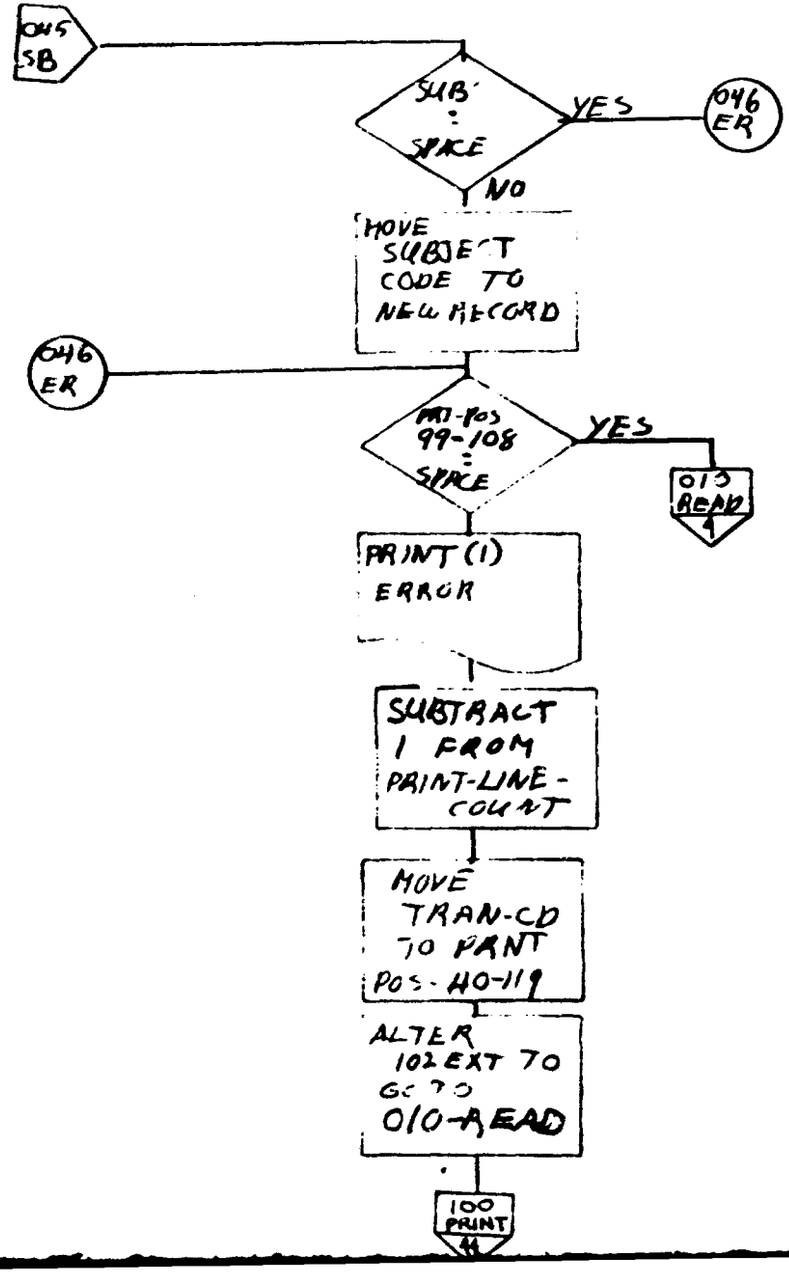

SMUFD FORM 2072-1 (Temp) Mar 68

OFFICE SYMBOL
SYSTEM CHART NO.
RUN NUMBER SLSC1
PAGE NUMBER 13 OF 44

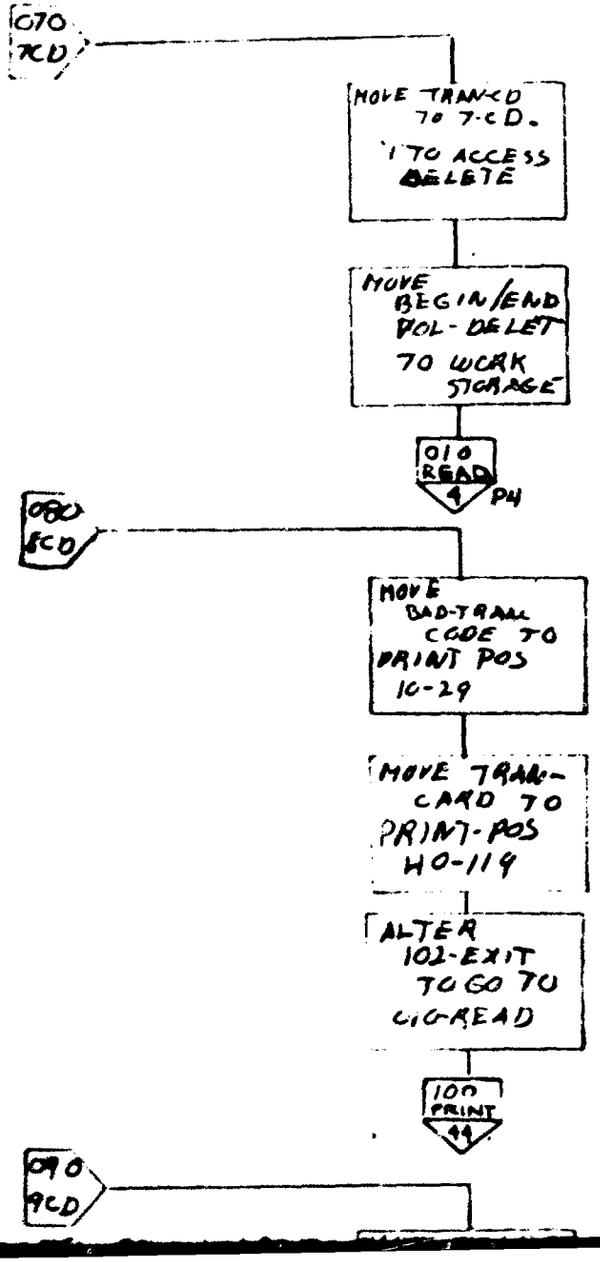

SMUFD FORM 2072-1 (T...p) M.. 68

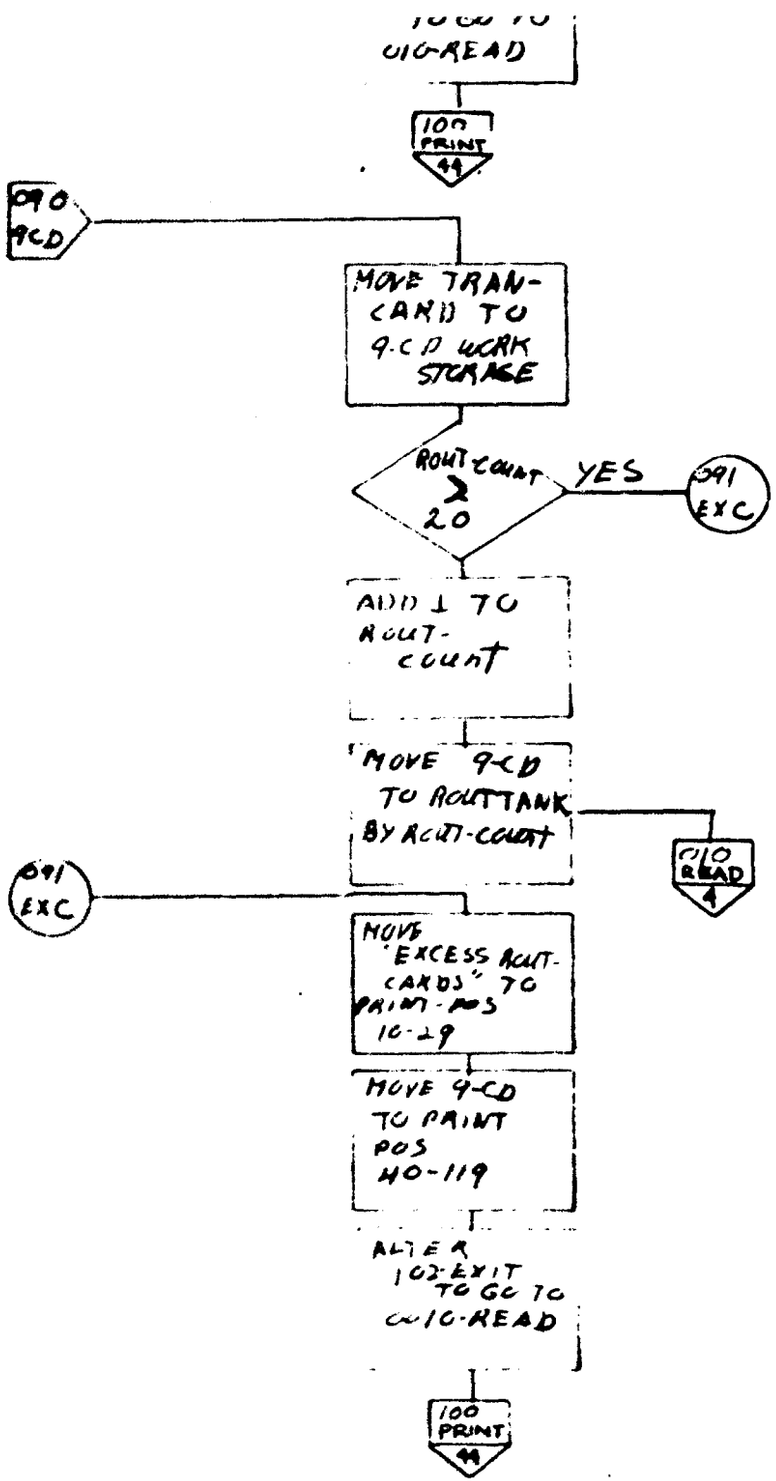

OFFICE SYMBOL
SYSTEM CHART NO.
RUN NUMBER SL501
PAGE NUMBER 14 OF 44

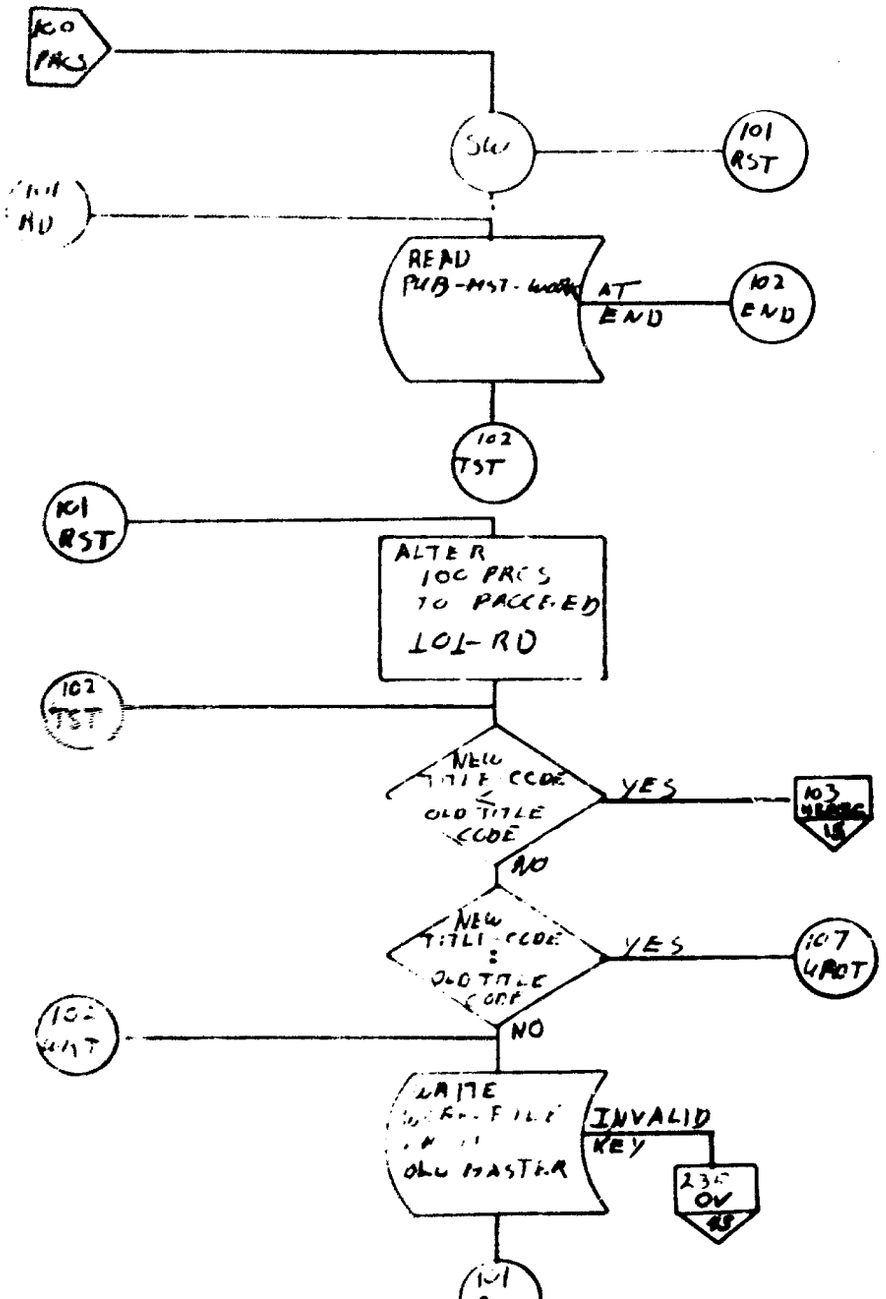

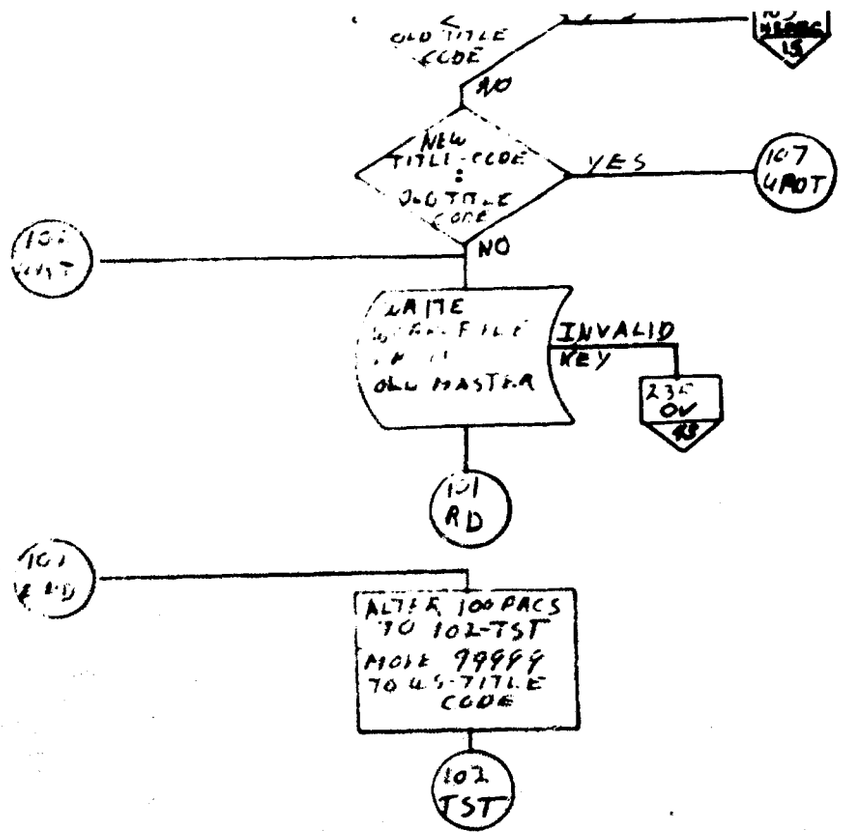

SMUFD FORM 2072-1 (Temp) Mar 68

OFFICE SYMBOL
SYSTEM CHART NO.
RUN NUMBER SLS01
PAGE NUMBER 15 OF 44

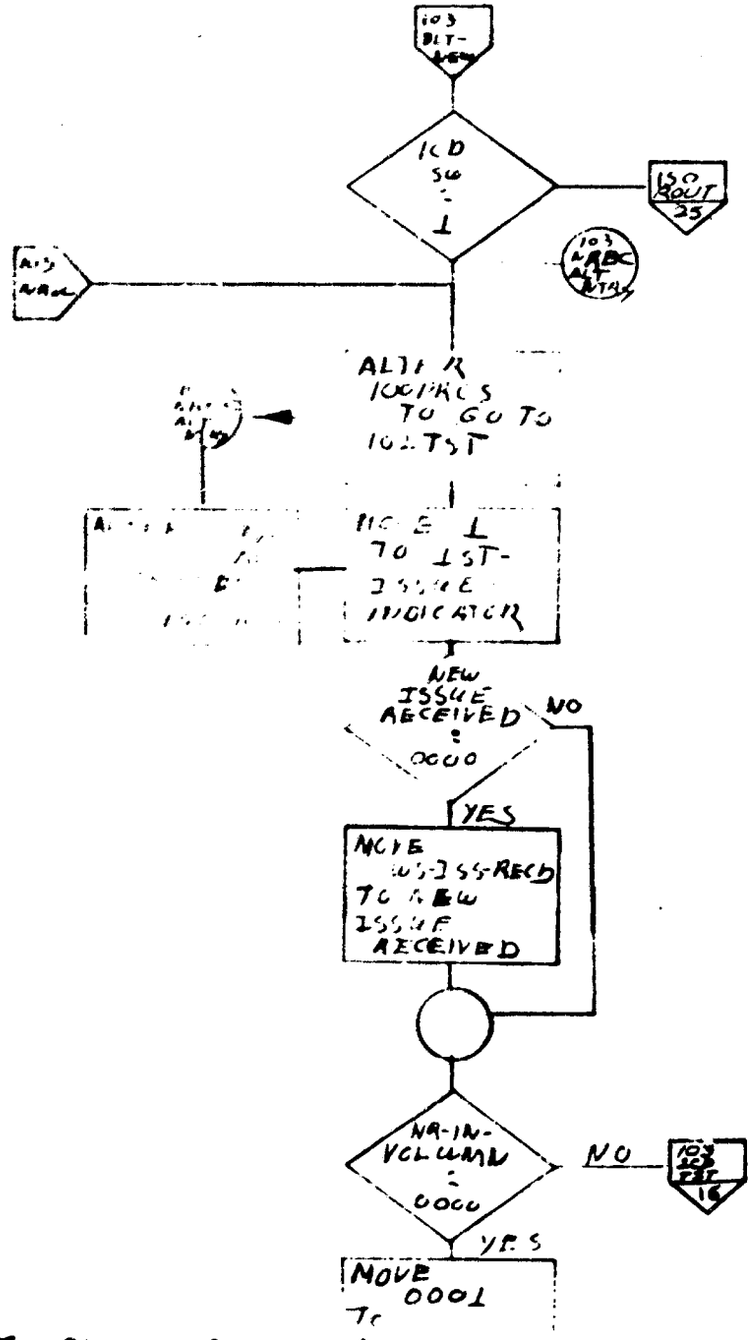

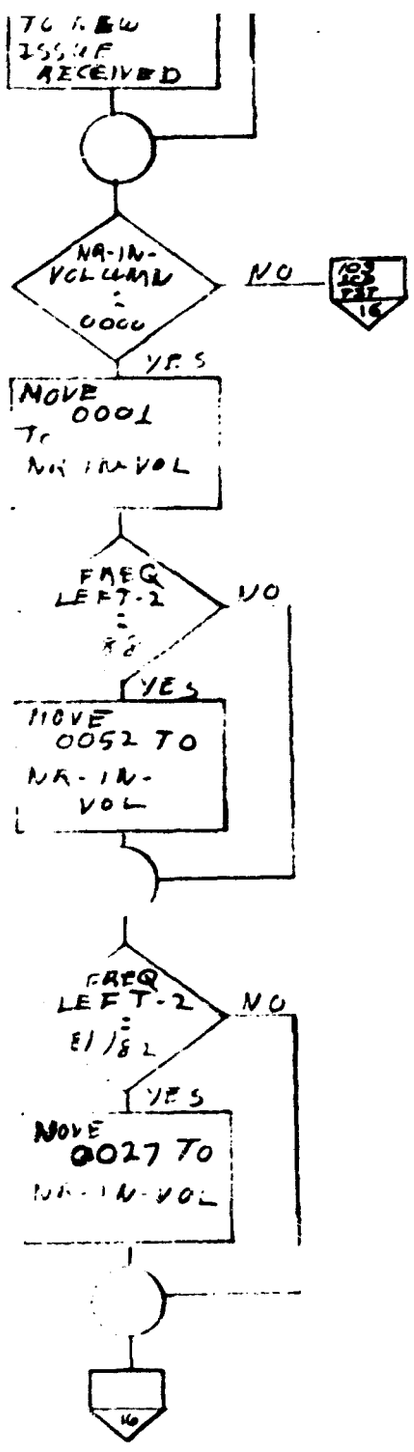

SMUFD FORM 2072-1 (Temp) May 68

OFFICE SYMBOL
SYSTEM CHART NO.
RUN NUMBER SLS01
PAGE NUMBER 16 OF 44

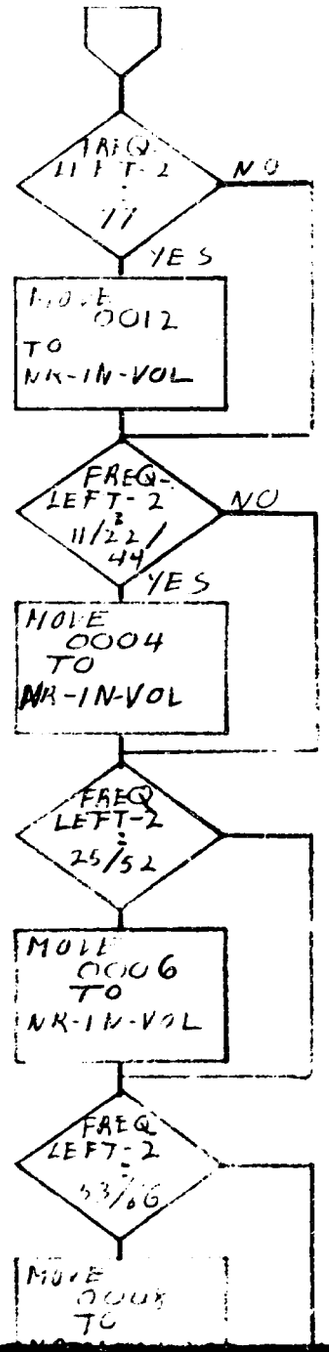

25/52
MOVE CCOG TO NA-IN-VOL
FREQ LEFT-2 53/60
MOVE CCOX TO NA-IN-VOL
LCD-SW = 1
YES
NO
12-8 PCH 18
CDCNT < PRINT-LIN COUNT
YES
104 NOTE 14
PERFORM 603-NA-> 610-EXIT
104 NOTE 14
103 LCD TST

13

OFFICE SYMBOL
SYSTEM CHART NO.
RUN NUMBER SL501
PAGE NUMBER 17 OF 44

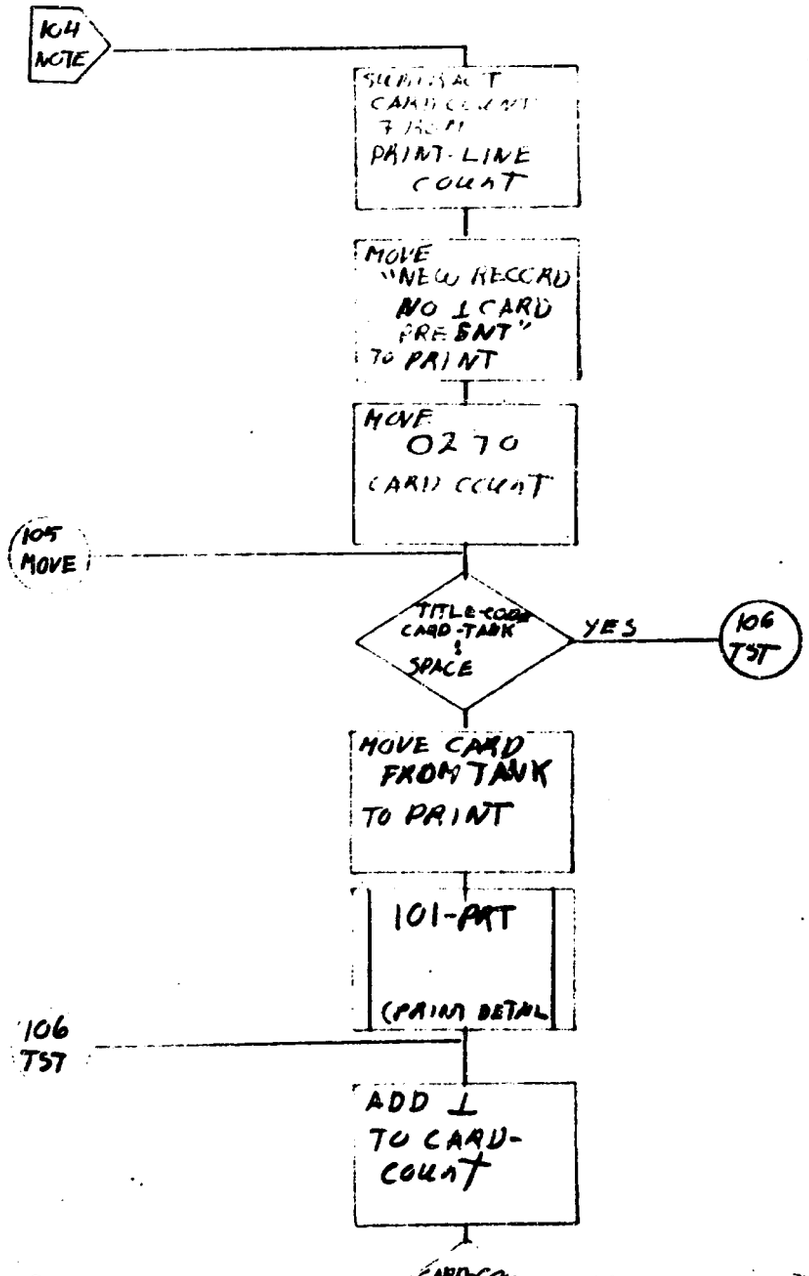

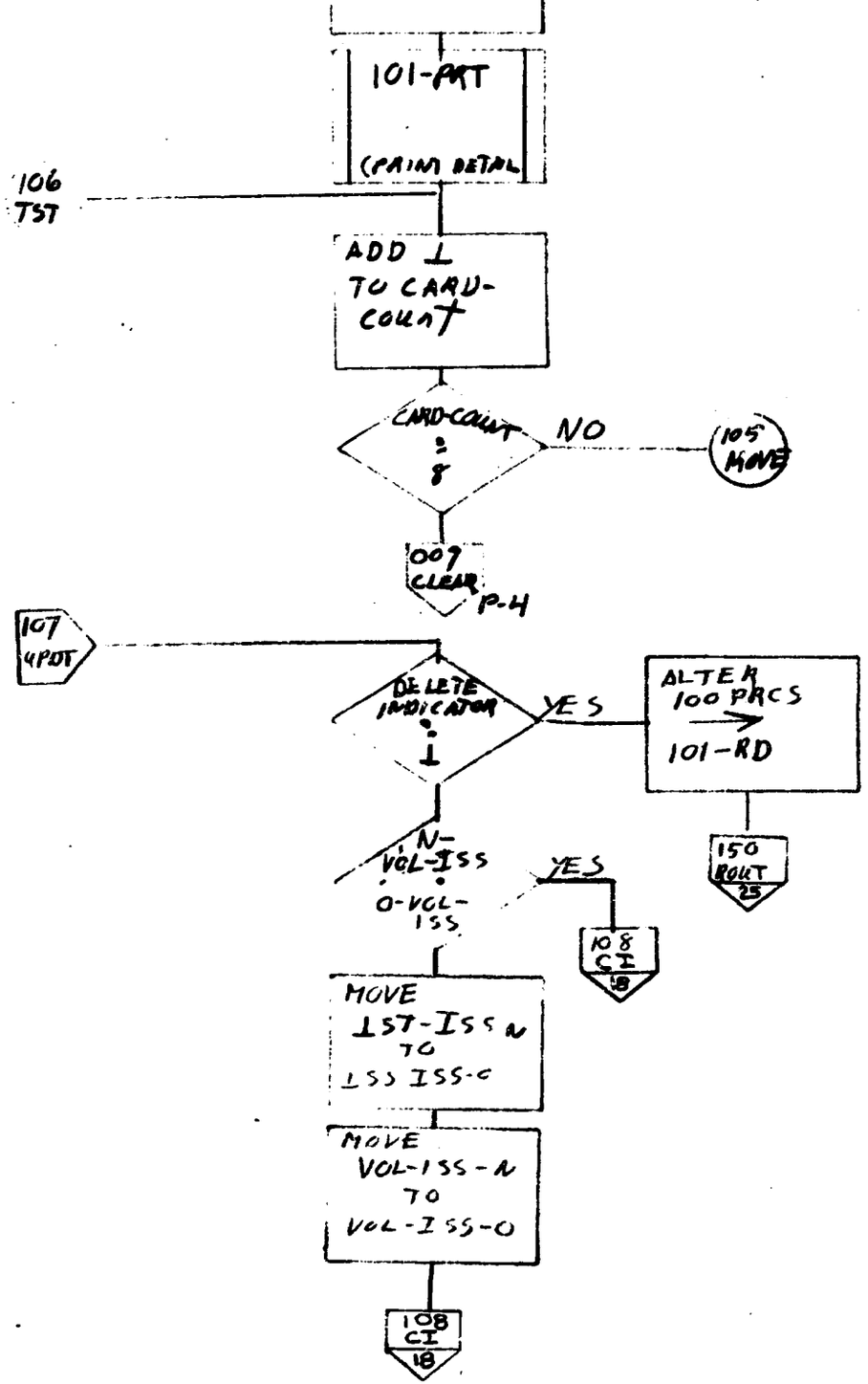
101-PRT
(PRINT DETAIL
106
TST
ADD 1
TO CARD-
COUNT
CARD-COUNT
=
8
NO
105
MOVE
007
CLEAR
P-4
107
4PDT
DELETE
INDICATOR
=
1
YES
ALTER
100 PRCS
101-RD
150
ROUT
25
N-
VOL-ISS
=
0-VOL-
ISS
YES
108
CI
18
MOVE
1ST-ISS-N
TO
1ST ISS-O
MOVE
VOL-ISS-N
TO
VOL-ISS-O
108
CI
18

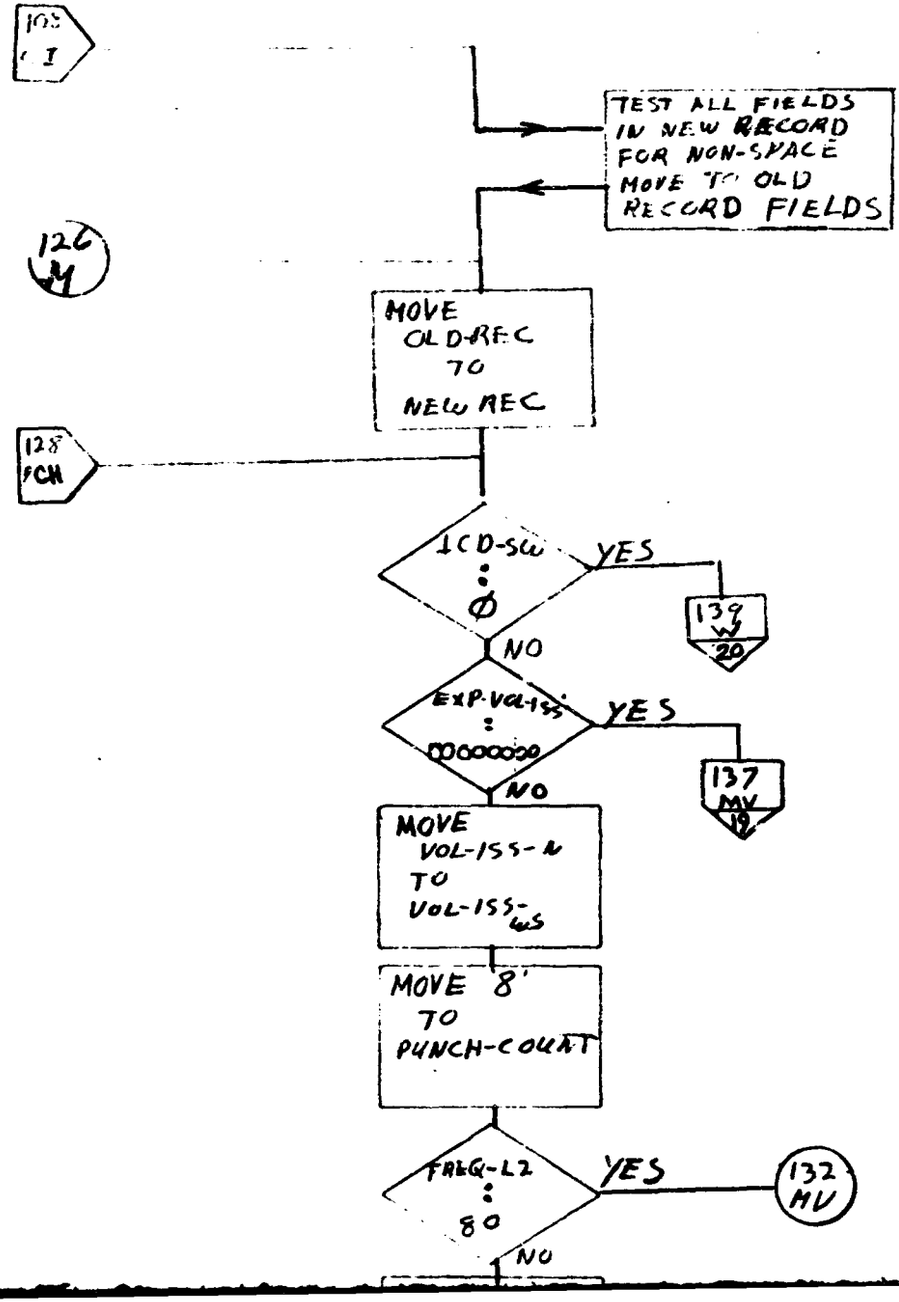
105 I
TEST ALL FIELDS IN NEW RECORD FOR NON-SPACE MOVE TO OLD RECORD FIELDS
126 M
MOVE OLD-REC TO NEW REC
128 PCH
ICD-SW
Ø
YES
139 W 20
NO
EXP-VOL-ISS
00000000
YES
137 MV 19
NO
MOVE VOL-ISS-N TO VOL-ISS-WS
MOVE 8 TO PUNCH-COUNT
FREQ-L2
80
YES
132 MV
NO

SMUFD FORM 2072-1 (Temp) Mar 68

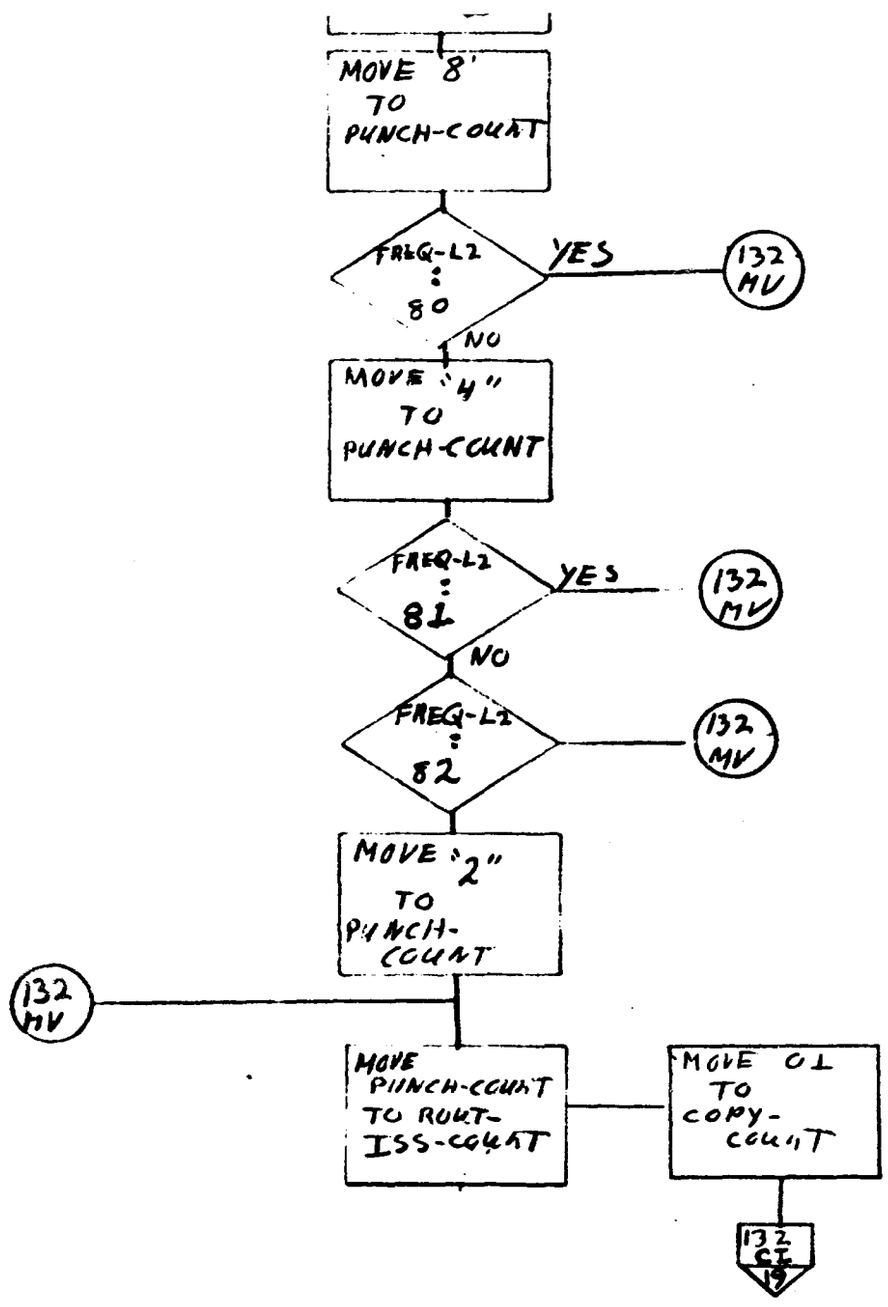

OFFICE SYMBOL
SYSTEM CHART NO.
RUN NUMBER SL501
PAGE NUMBER 19 OF 44

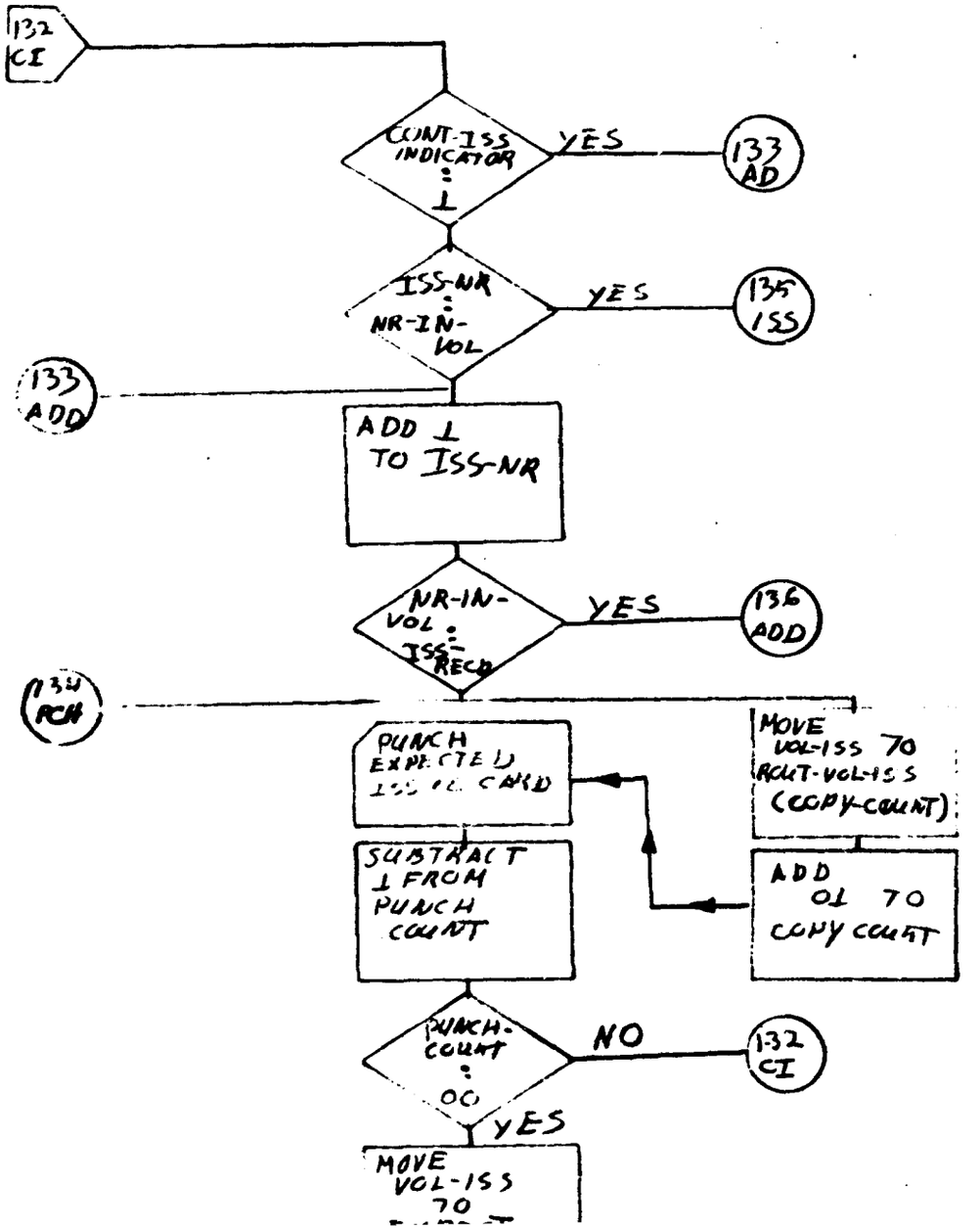

SMUFD FORM 2072-1 (Temp) May 68

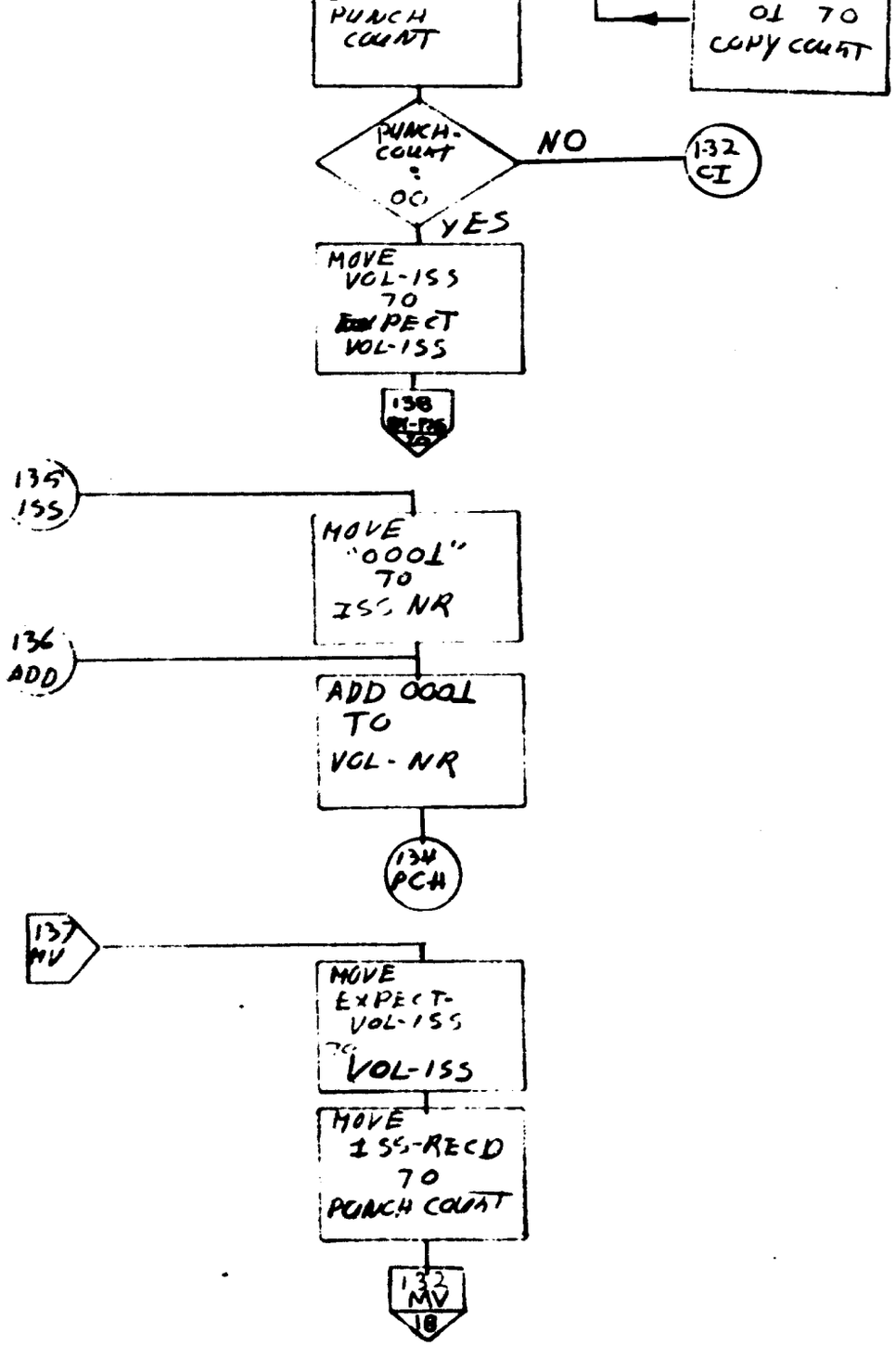

OFFICE SYMBOL
SYSTEM CHART NO.
RUN NUMBER SLS01
PAGE NUMBER 20 OF 44

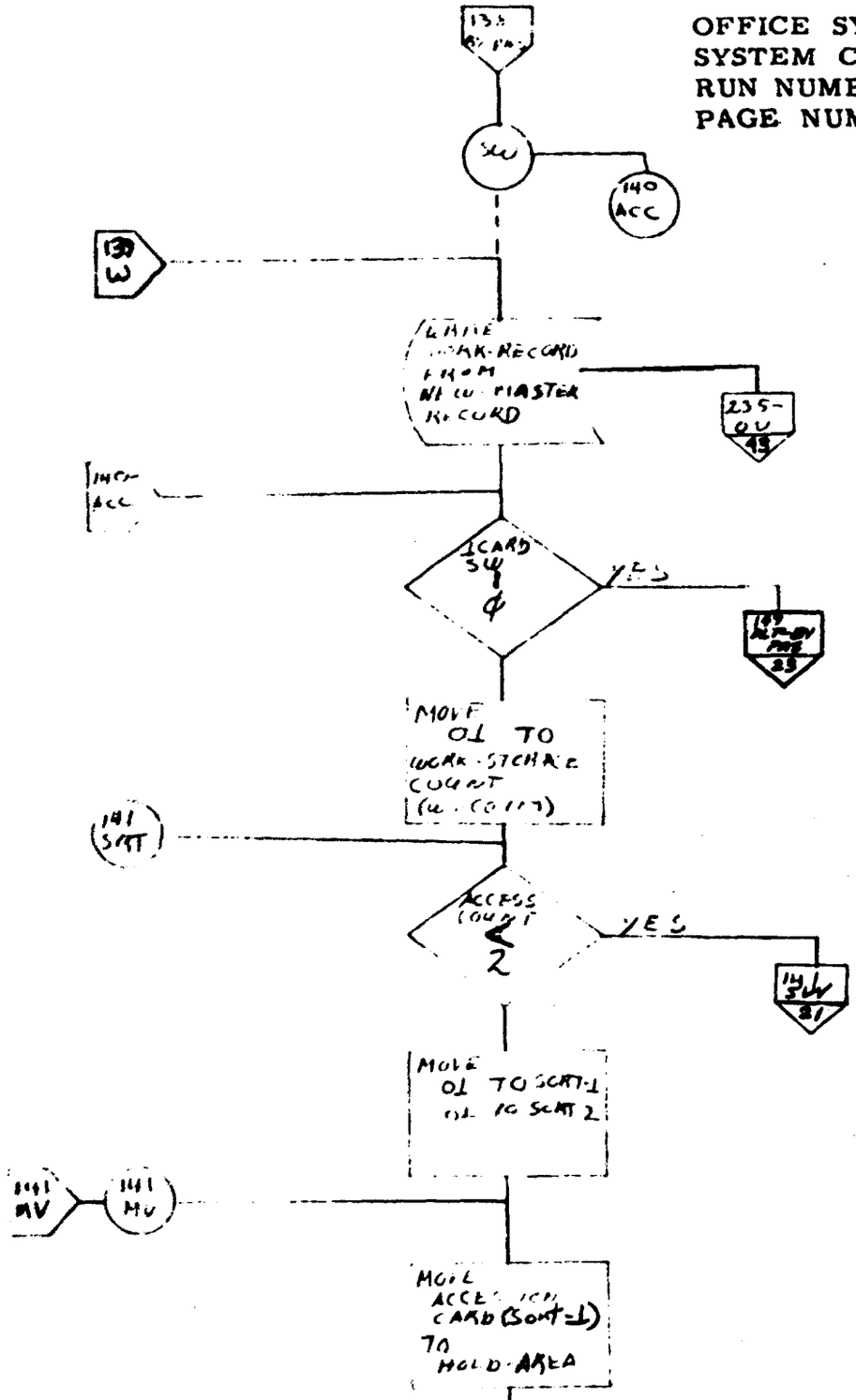

SMUFD FORM 2072-1 (T... ...p) N... 68

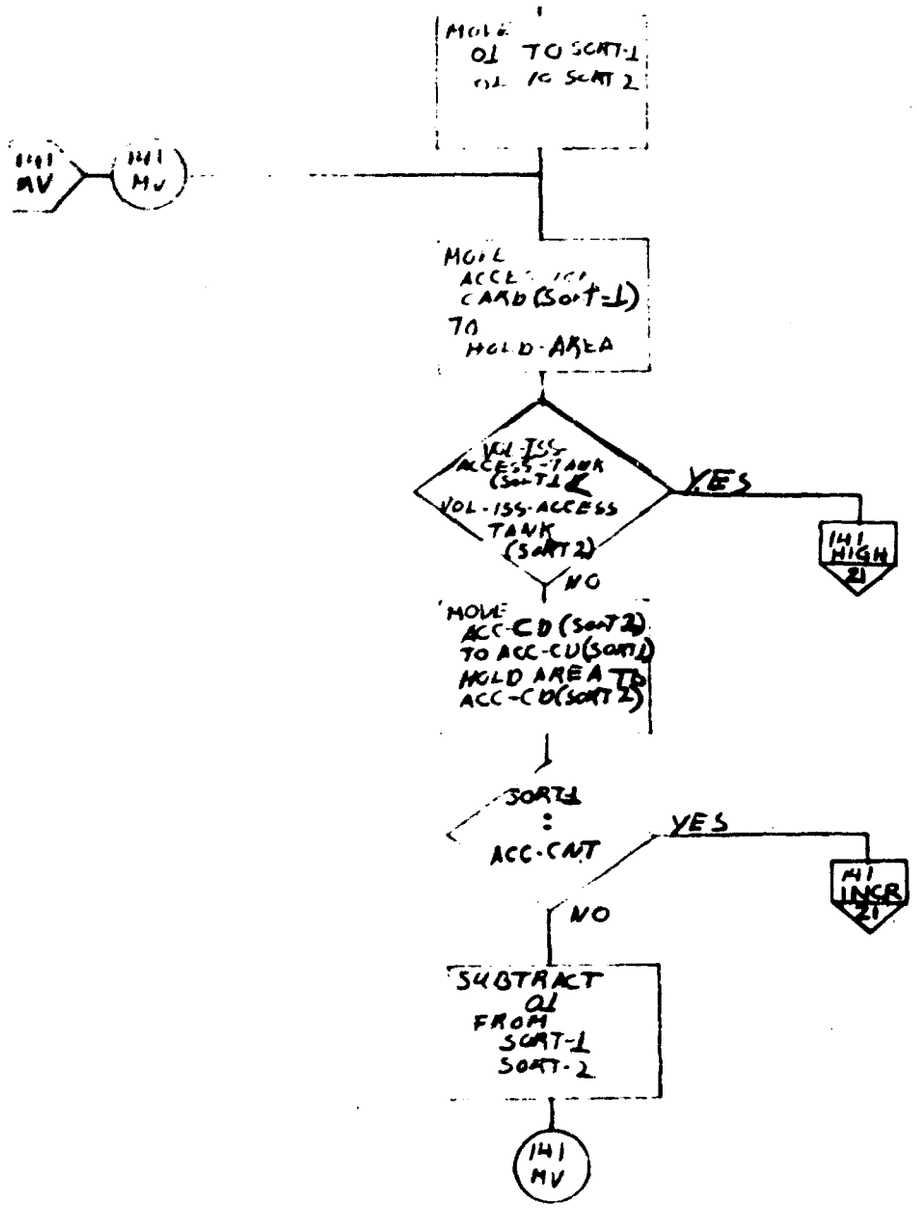

OFFICE SYMBOL
SYSTEM CHART NO.
RUN NUMBER SLS01
PAGE NUMBER 21 OF 44

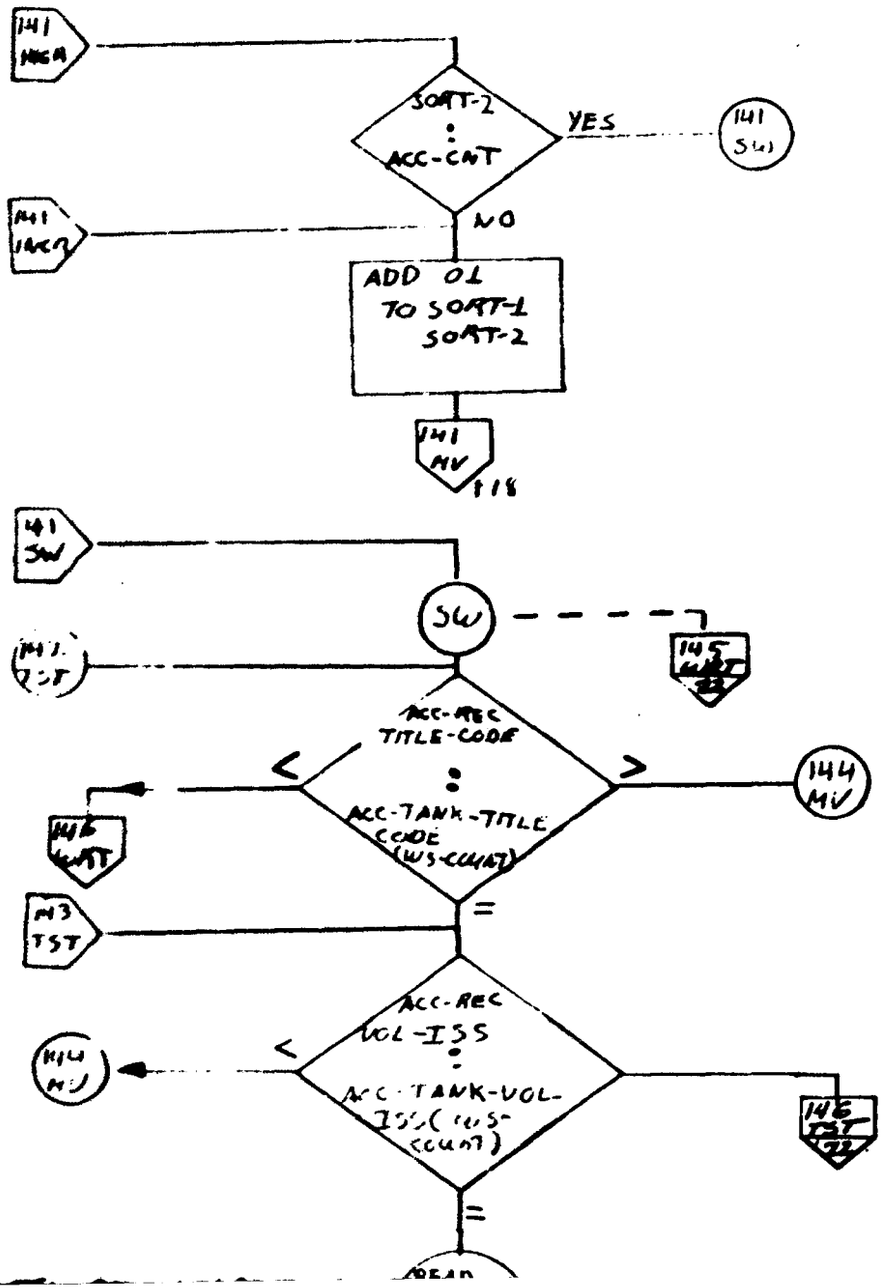

SNUFFD FORM 2072-1 (Trump) Mar 68

B

OFFICE SYMBOL
SYSTEM CHART NO.
RUN NUMBER SL501
PAGE NUMBER 22 OF 44

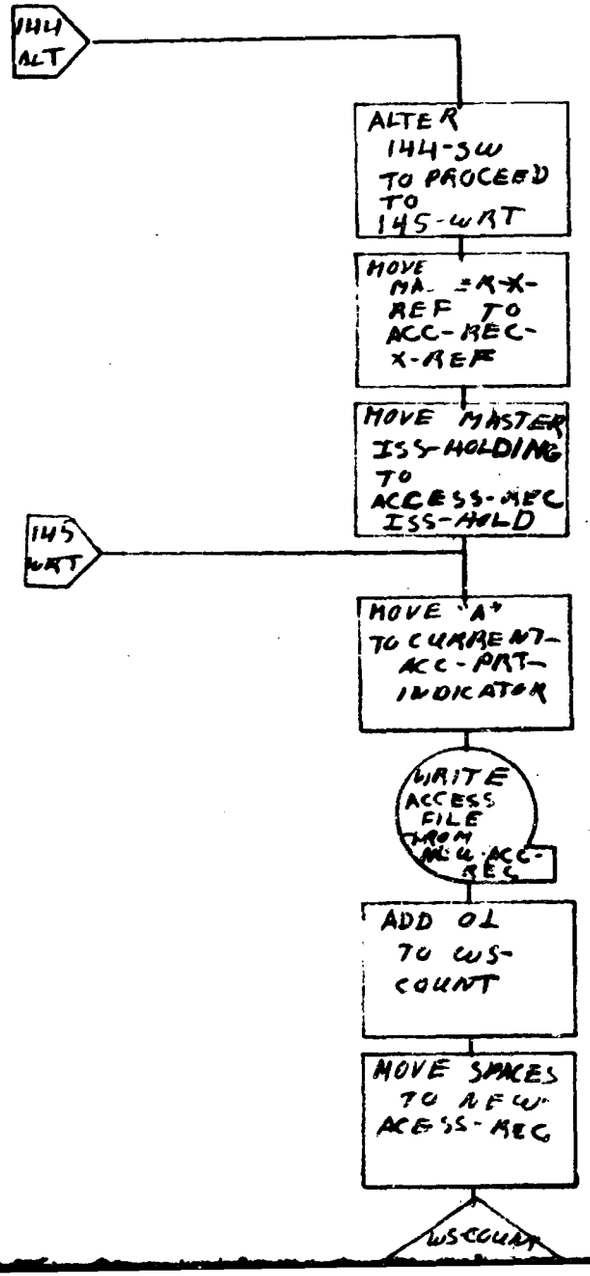

SMUFD FORM 2072-1 (Temp) Mar 68

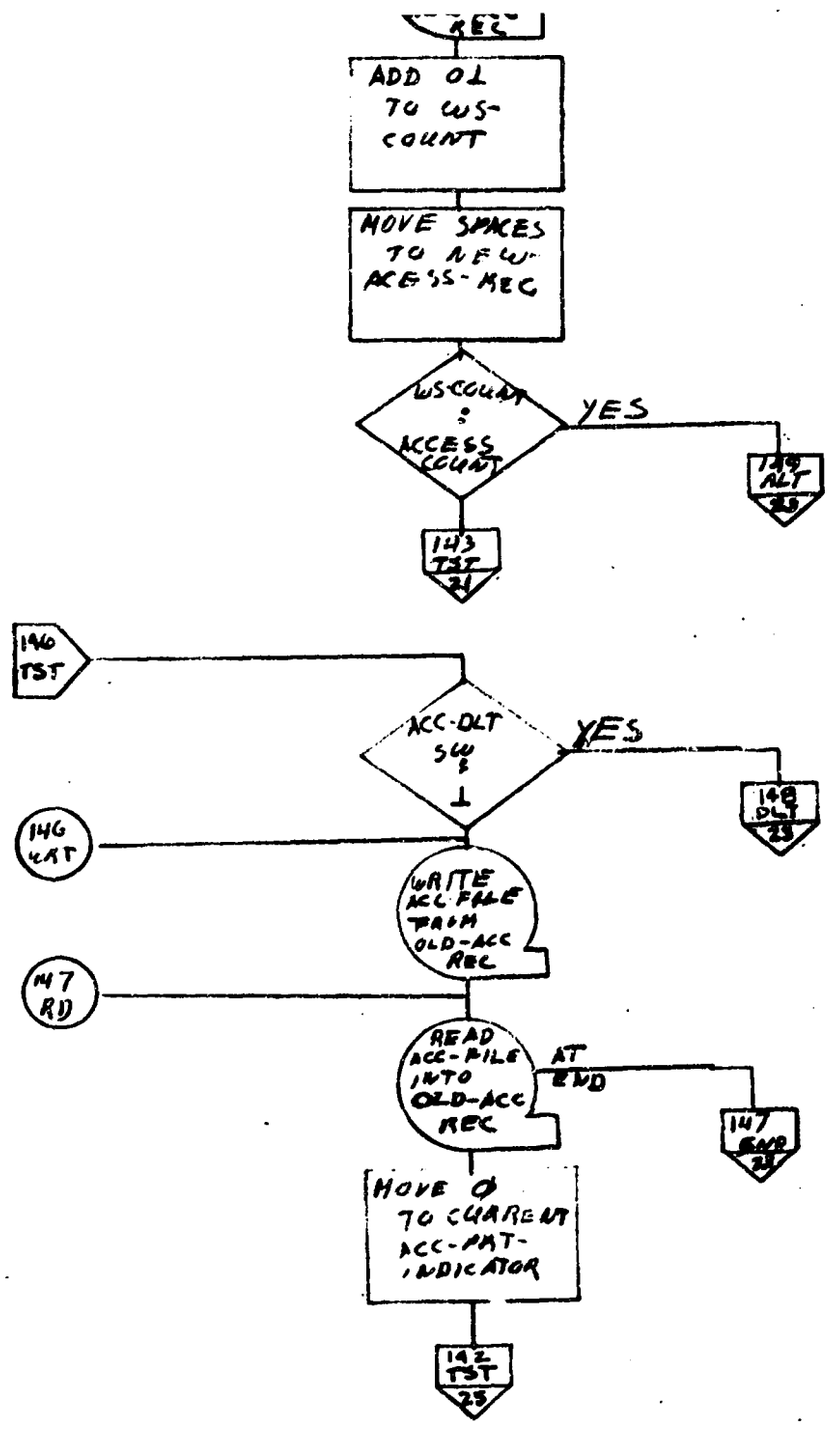

OFFICE SYMBOL
SYSTEM CHART NO.
RUN NUMBER S1501
PAGE NUMBER 23 OF 44

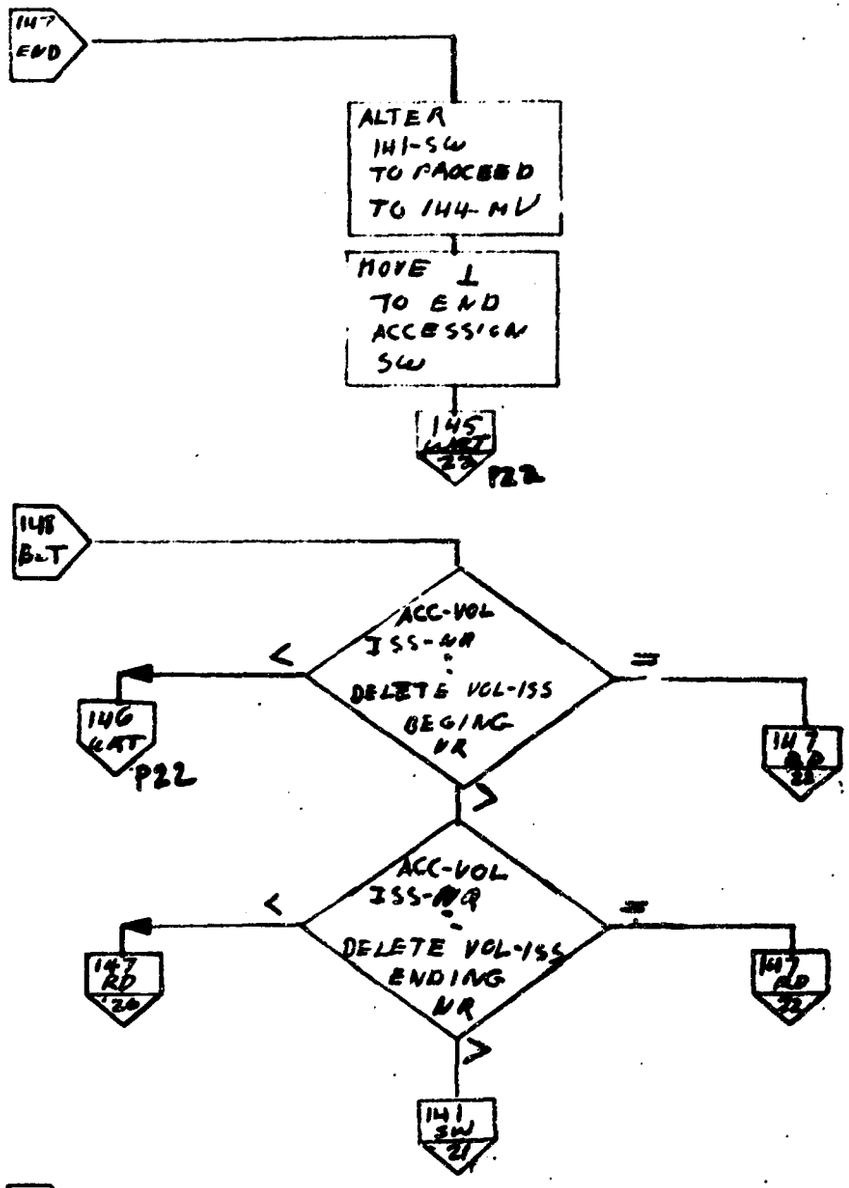

SMUFD FORM 2072-1 (Temp) Mar 68

B

OFFICE SYMBOL
SYSTEM CHART NO.
RUN NUMBER SLS01
PAGE NUMBER 24 OF 44

D

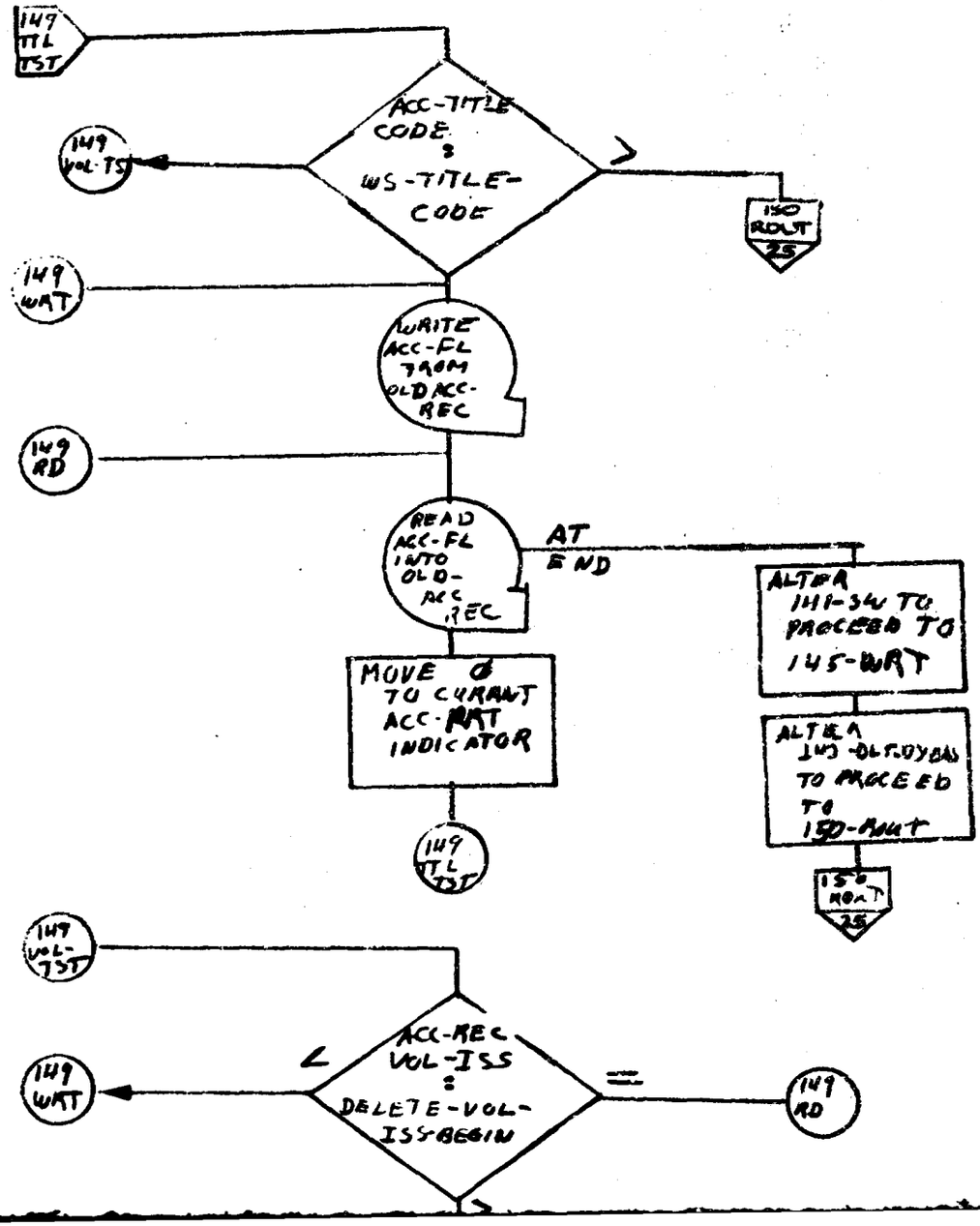

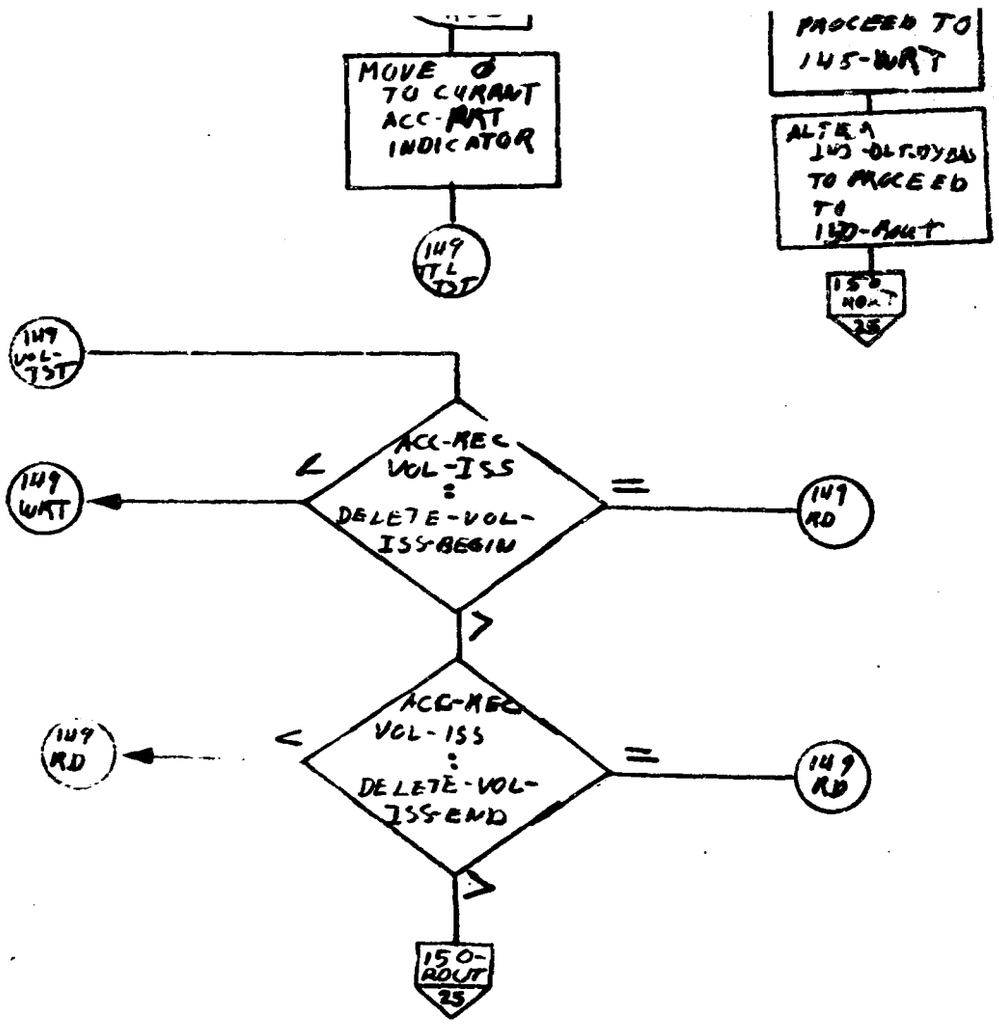

SMUFD FORM 2072-1 (Transp) Mar 68

OFFICE SYMBOL
SYSTEM CHART NO.
RUN NUMBER SLS01
PAGE NUMBER 25 OF 44

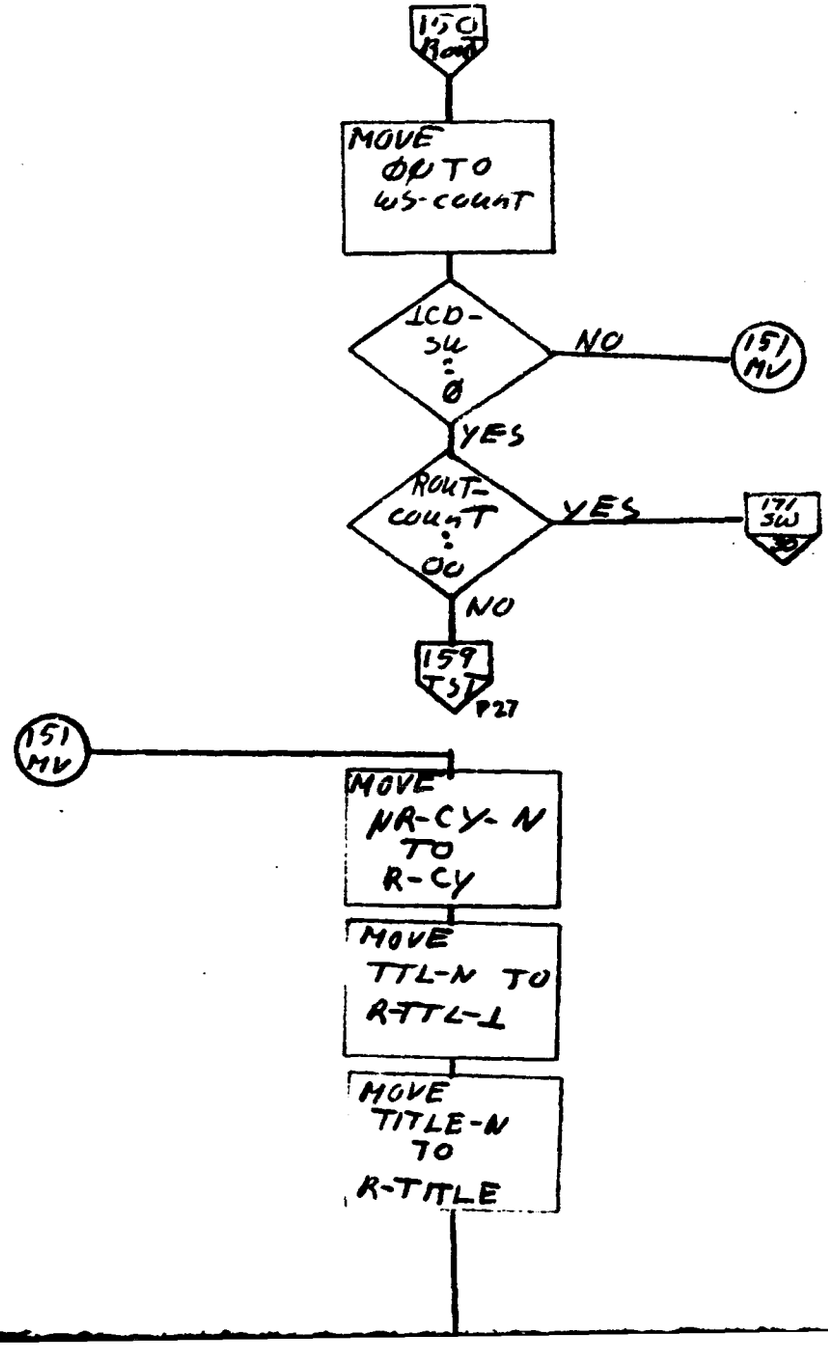

68

8

SMUFD FORM 2072-1 (Temp) Mar 68

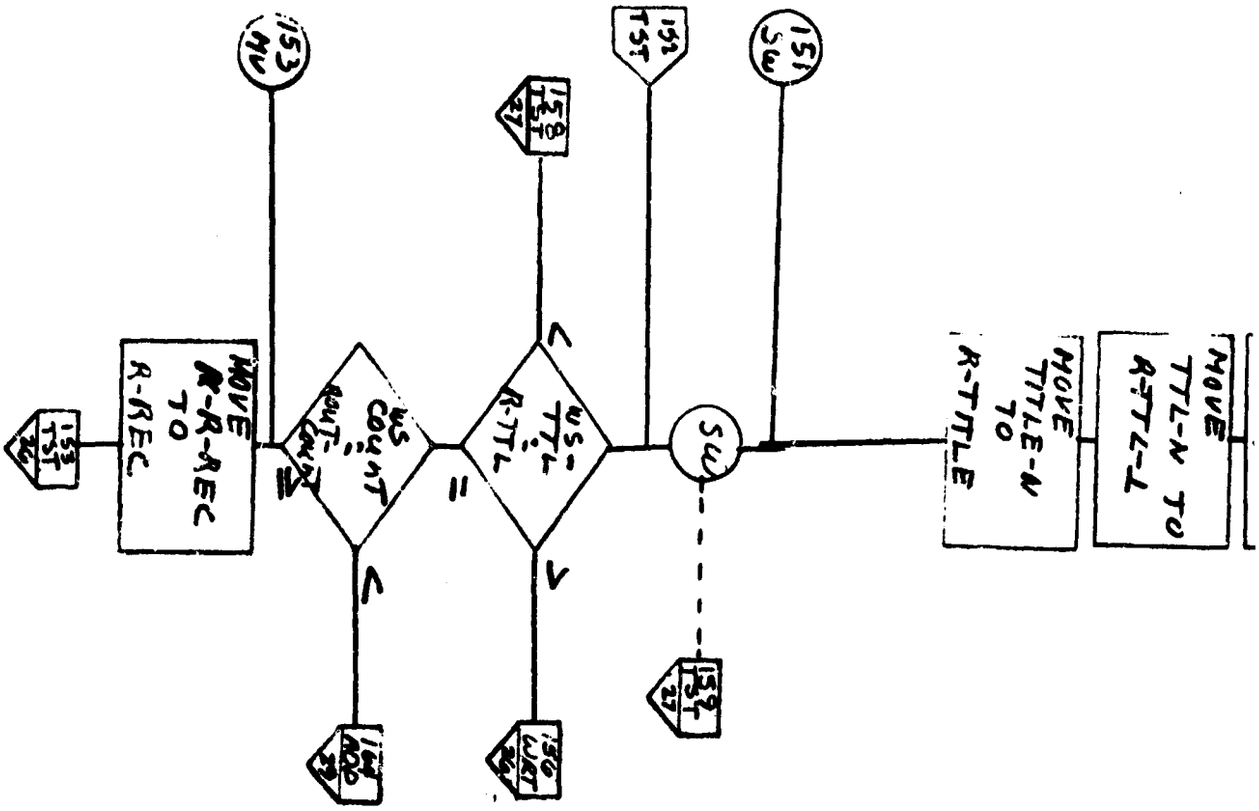

OFFICE SYMBOL
SYSTEM CHART NO.
RUN NUMBER 3LS01
PAGE NUMBER 26 OF 44

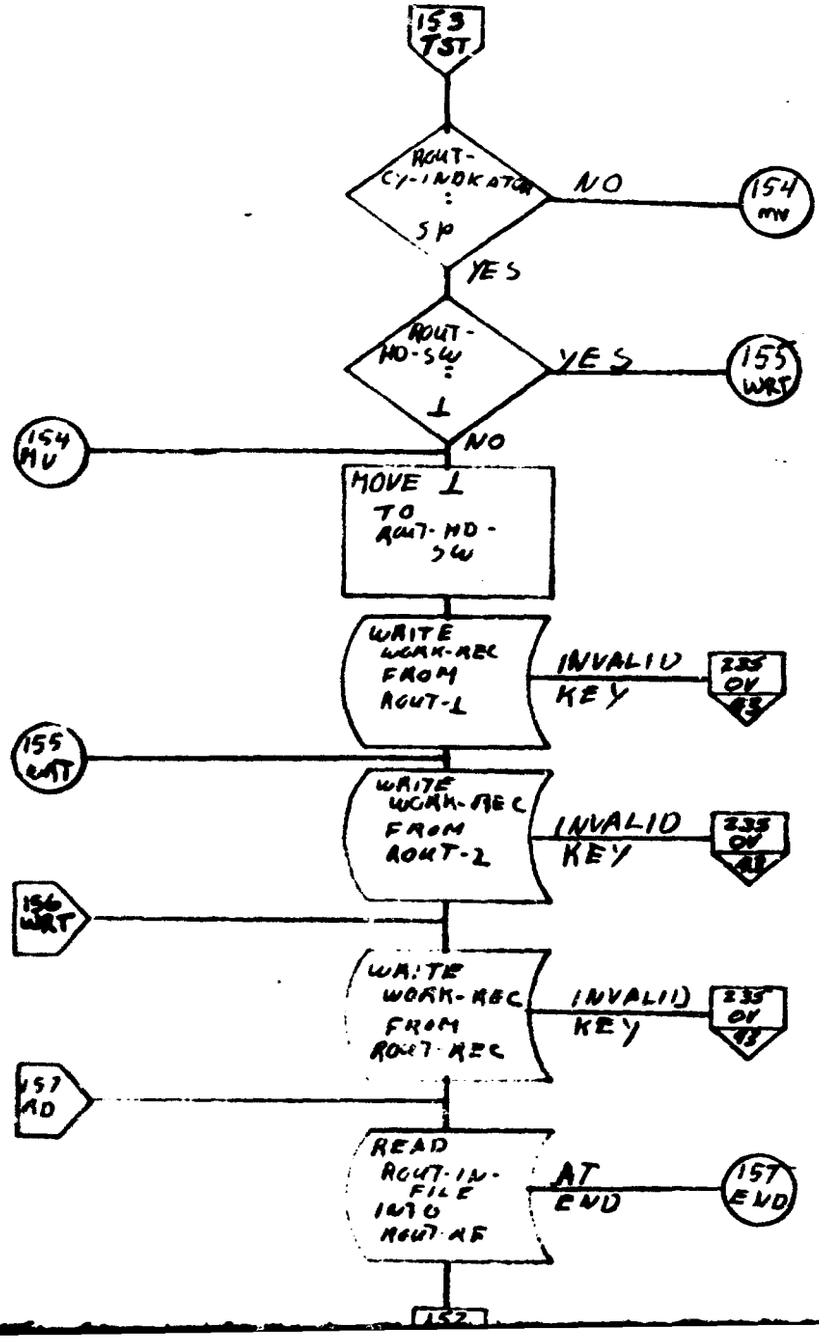

SMUFD FORM 2072-1 (Temp) May 68

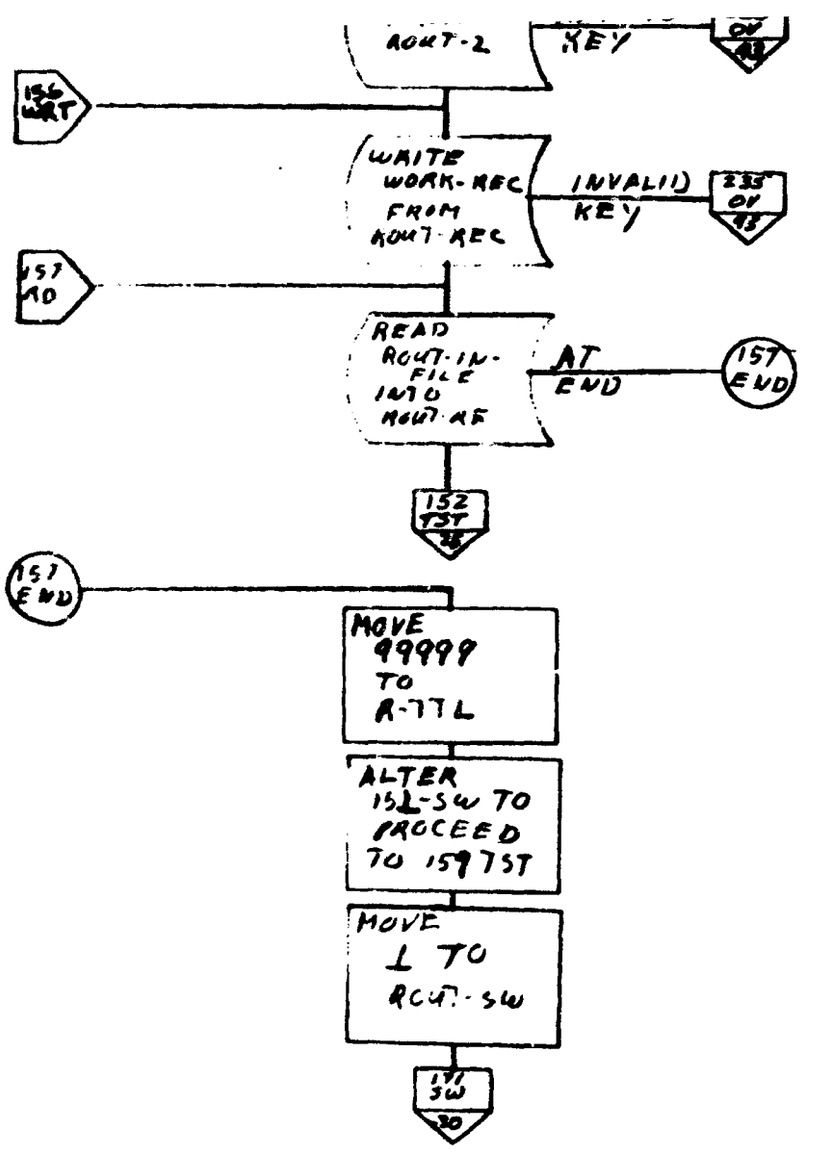

OFFICE SYMBOL
SYSTEM CHART NO.
RUN NUMBER SL501
PAGE NUMBER 27 OF 44

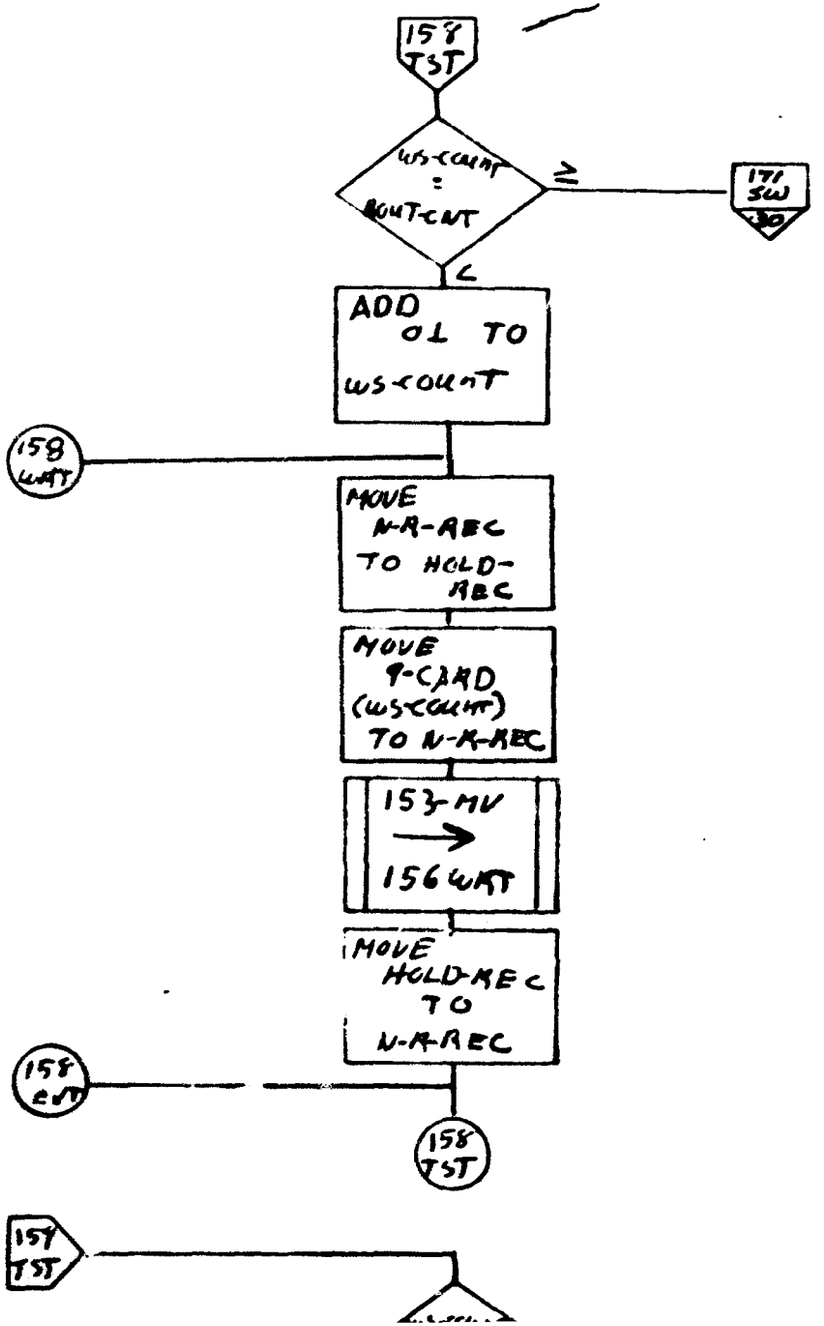

B

SMUFD FORM 2072-1 (Temp) Mar 68

OFFICE SYMBOL _____
SYSTEM CHART NO. _____
RUN NUMBER SLS01
PAGE NUMBER 28 OF 44

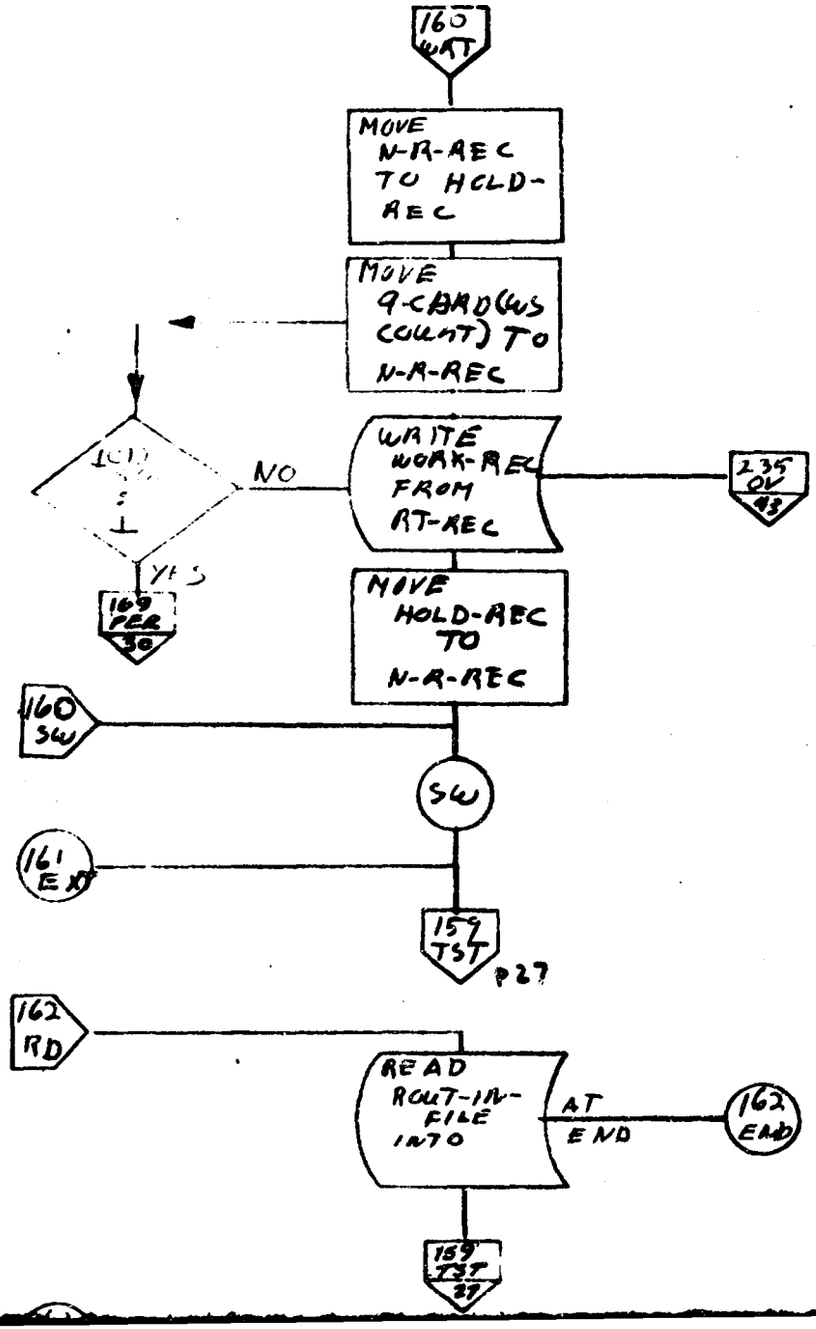

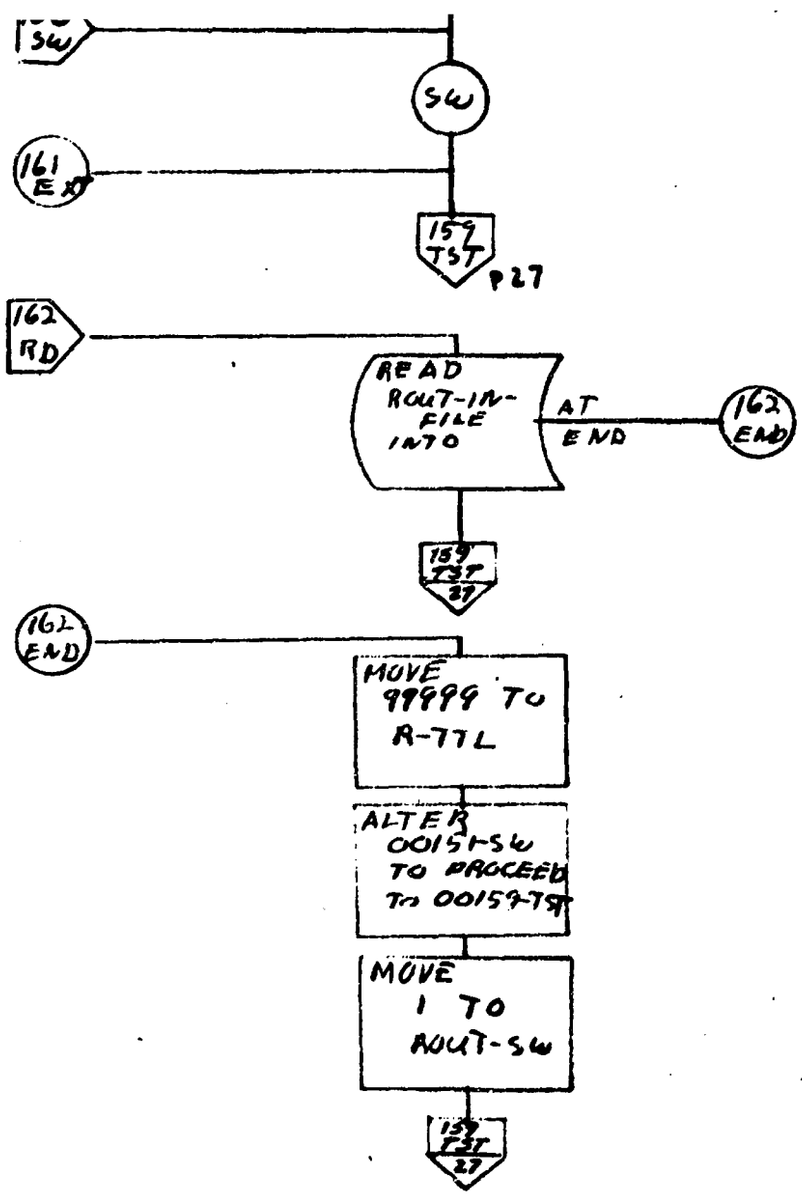

SMUFD FORM 2072-1 (Temp) Mar 68

8

OFFICE SYMBOL
SYSTEM CHART NO.
RUN NUMBER SL501
PAGE NUMBER 29 OF 44

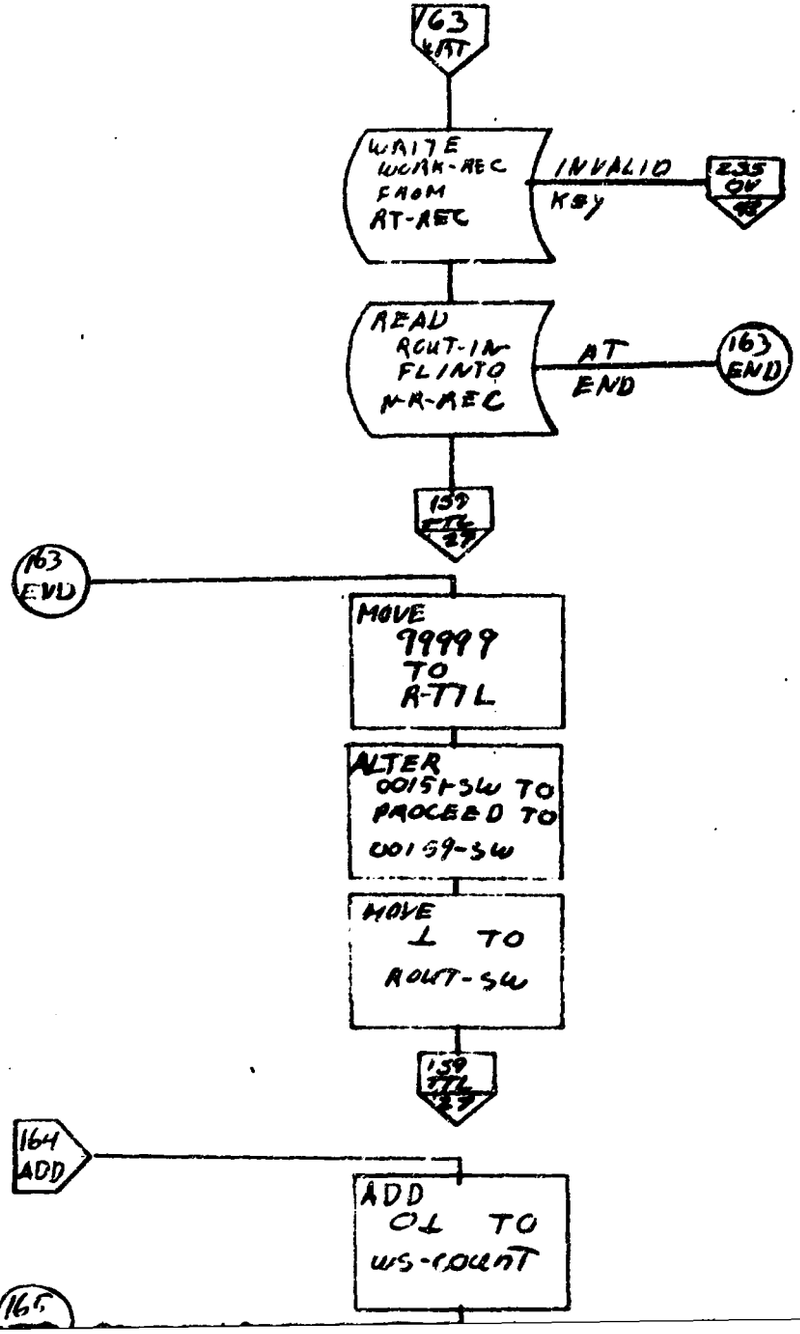

68

SMUFD FORM 2072-1 (Temp) Mar 68

B

OFFICE SYMBOL
SYSTEM CHART NO.
RUN NUMBER SLS01
PAGE NUMBER 30 OF 44

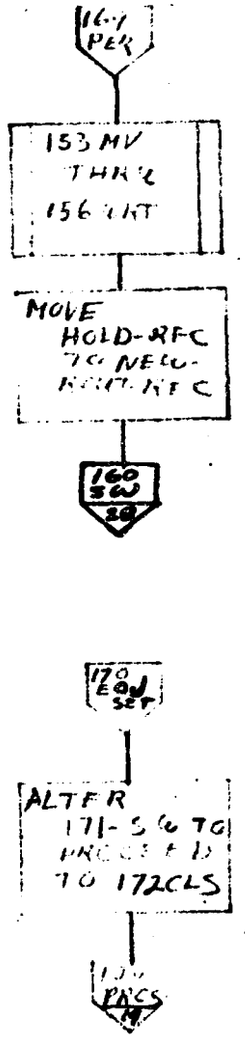

B

SMUFD FORM 2072-1 (Temp) Mar 68

OFFICE SYMBOL
SYSTEM CHART NO.
RUN NUMBER SLS01
PAGE NUMBER 31 OF 44

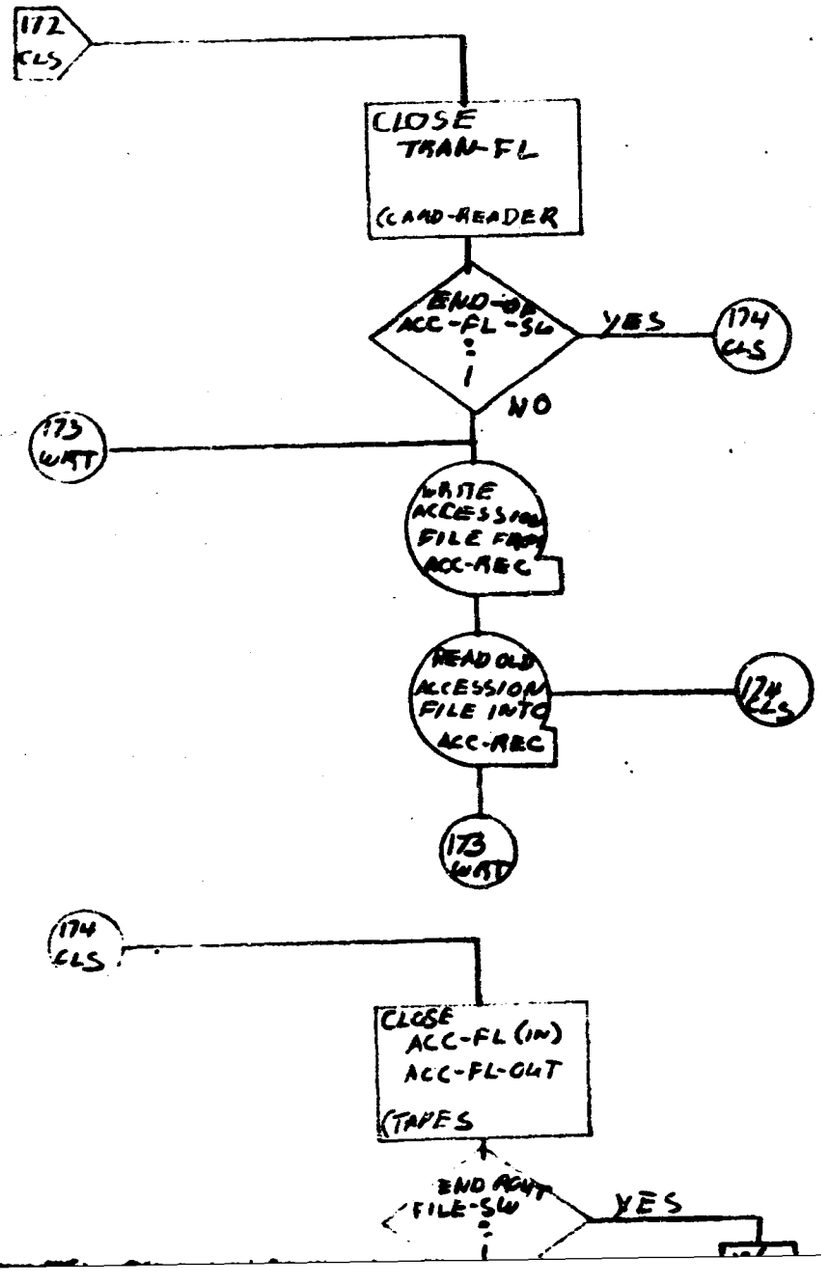

SMUFD FORM 2072-1 (Temp) Mar 68

B

D

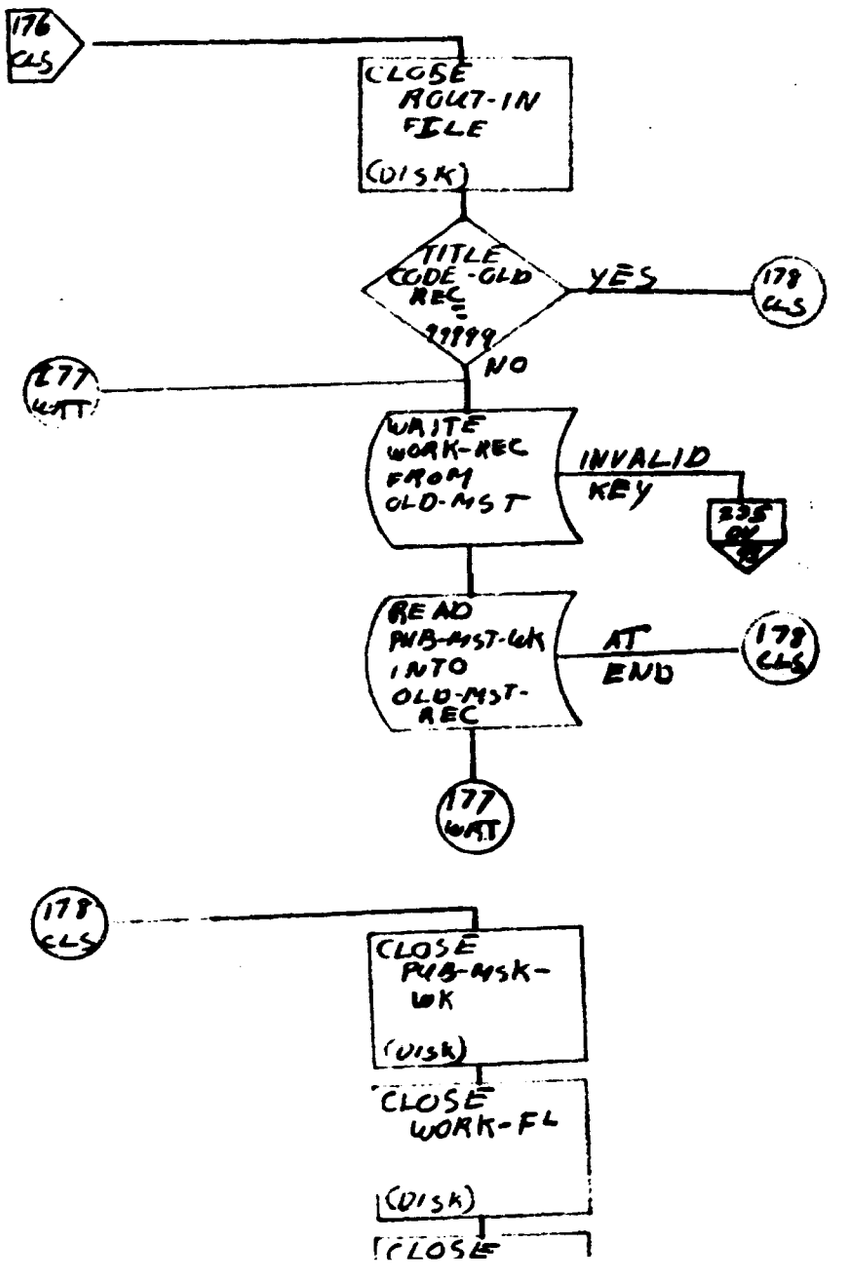
176 CLS
CLOSE MAST-IN FILE (DISK)
TITLE CODE-OLD REC = 99999
YES
178 CLS
NO
177 WRT
WRITE WORK-REC FROM OLD-MST
INVALID KEY
READ PUB-MST-WK INTO OLD-MST-REC
AT END
178 CLS
177 WRT
178 CLS
CLOSE PUB-MSK-WK (DISK)
CLOSE WORK-FL (DISK)
CLOSE

SMUFD FORM 2072-1 (Temp) Mar 68

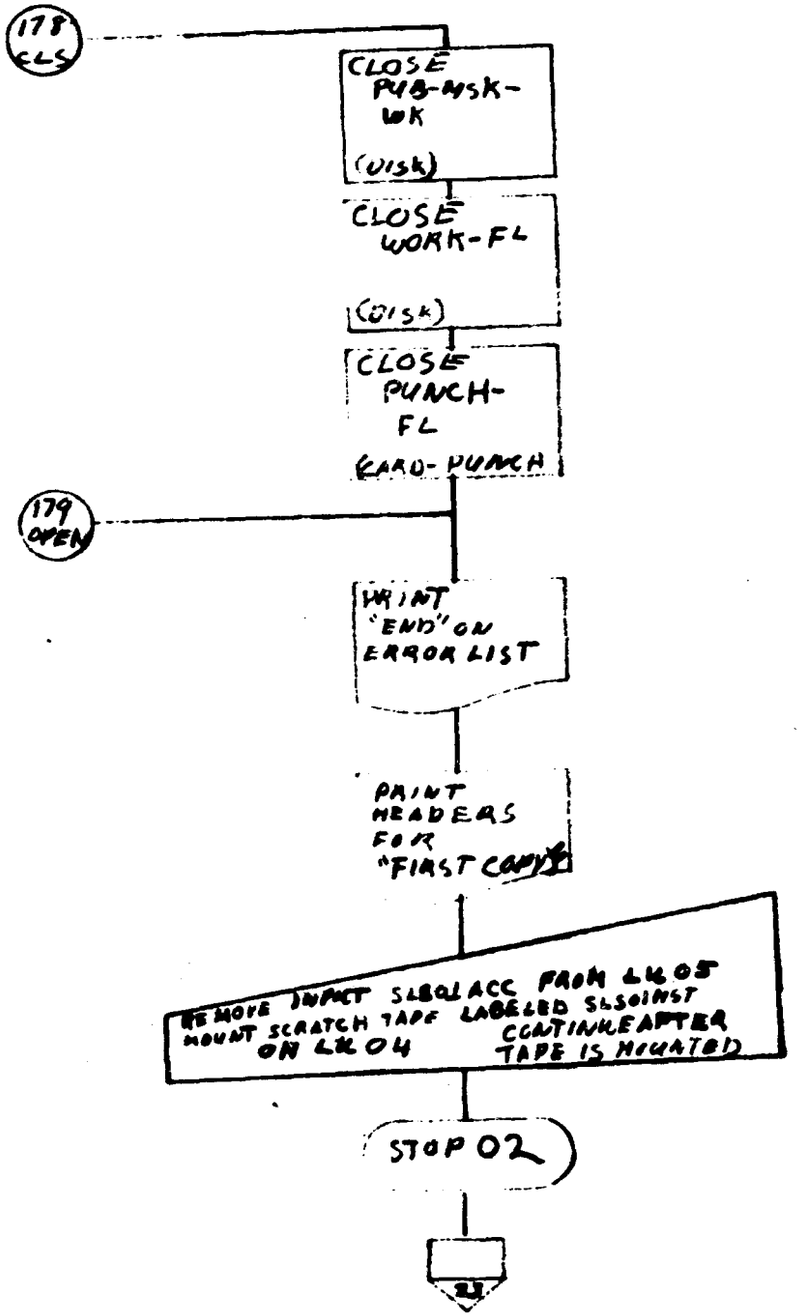

OFFICE SYMBOL
SYSTEM CHART NO.
RUN NUMBER SL301
PAGE NUMBER 33 OF 44

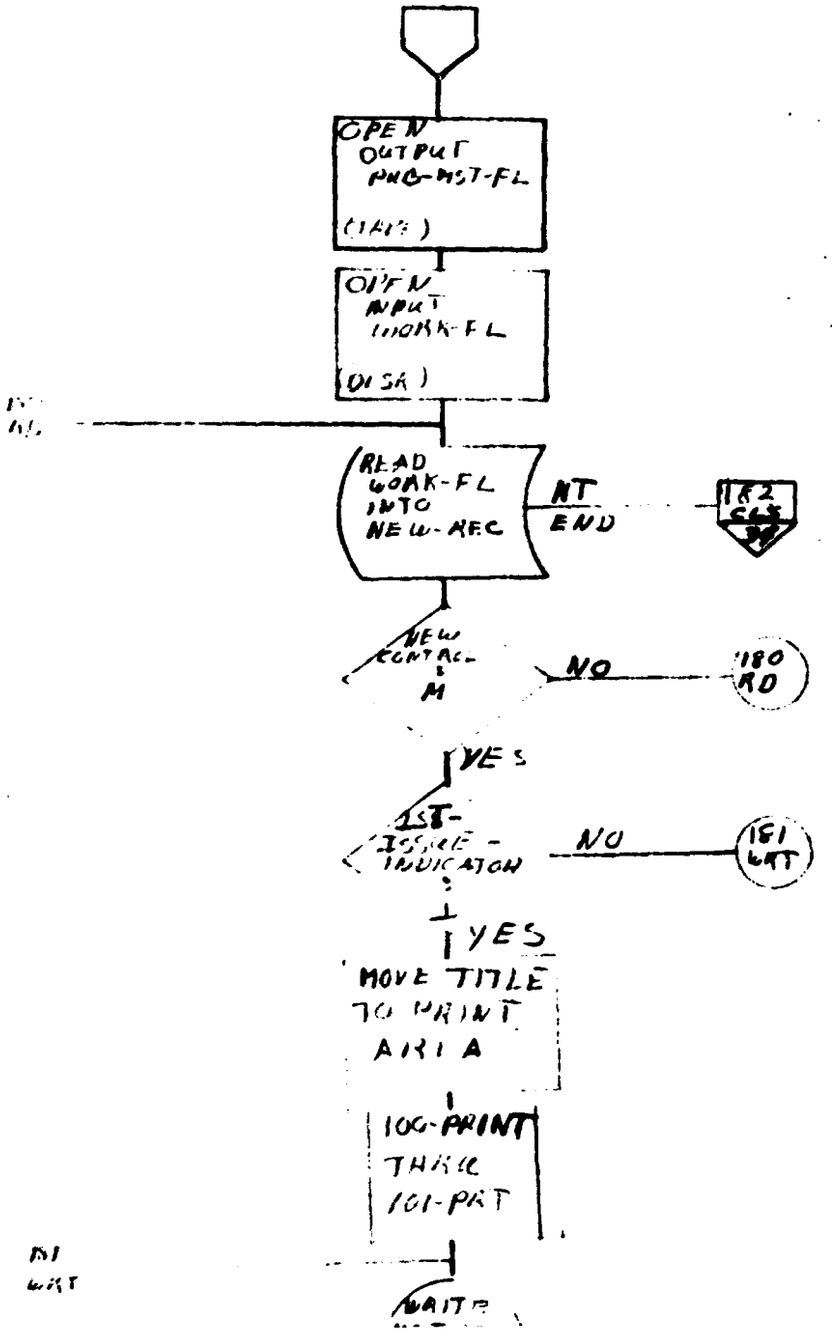

SMUFD FORM 2072-1 (Temp) Mar 68

B

OFFICE SYMBOL
SYSTEM CHART NO.
RUN NUMBER SLS01
PAGE NUMBER 34 OF 44

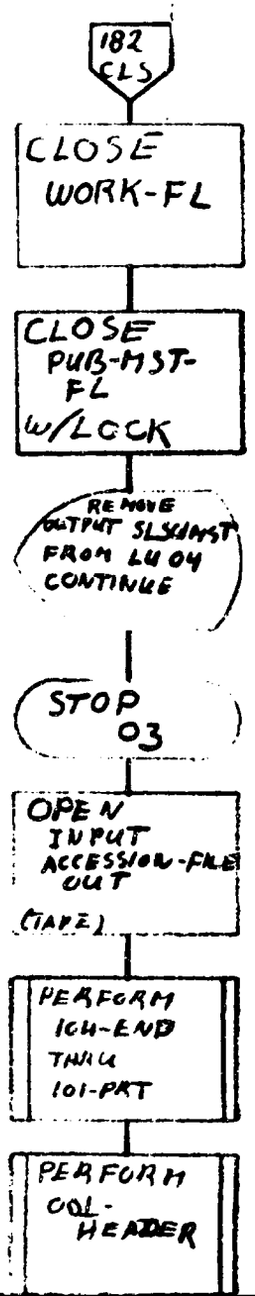

SMUFD FORM 2072-1 (Temp) Mar 68

OFFICE SYMBOL
SYSTEM CHART NO.
RUN NUMBER SLS01
PAGE NUMBER 35 OF 44

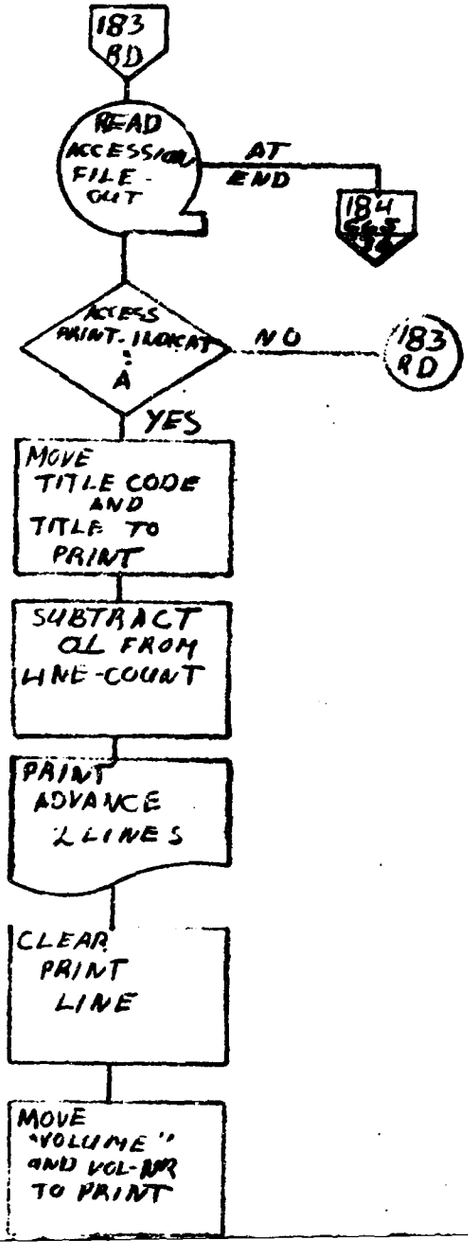

PRINT ADVANCE 2 LINES
CLEAR PRINT LINE
MOVE "VOLUME" AND VOL-NR TO PRINT
MOVE "ISSUE" AND ISS-NR TO PRINT
MOVE "COPIES" AND NR-OF-COPIES TO PRINT
PERFORM 106-PRINT THRU 101-PAT
183 RD

OFFICE SYMBOL
SYSTEM CHART NO.
RUN NUMBER SLS01
PAGE NUMBER 36 OF 44

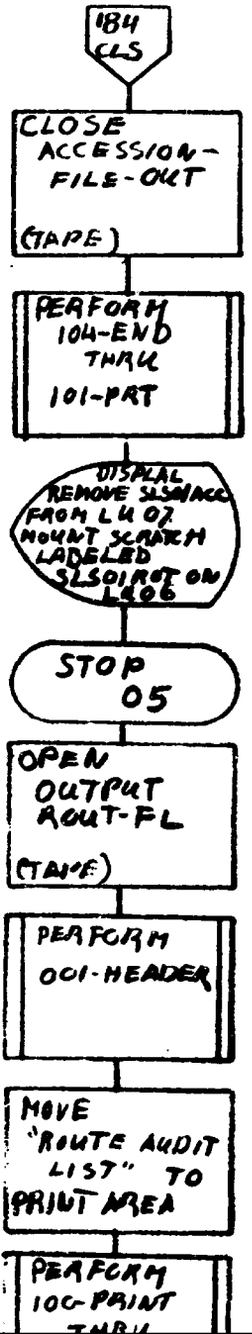

68

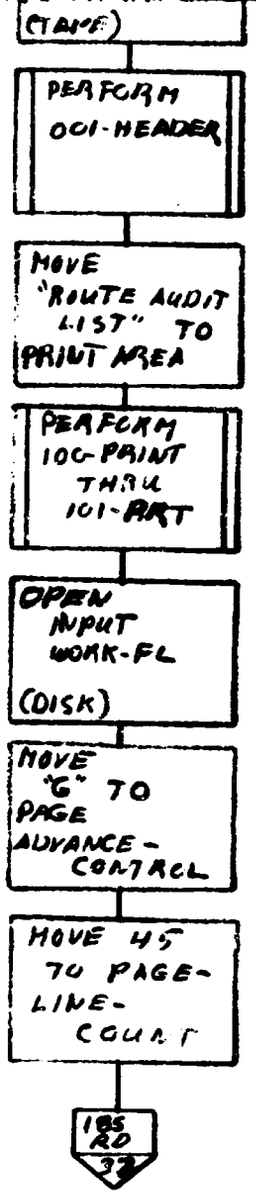
(TAPE)
PERFORM 001-HEADER
MOVE "ROUTE AUDIT LIST" TO PRINT AREA
PERFORM 100-PRINT THRU 101-ART
OPEN INPUT WORK-FL (DISK)
MOVE "C" TO PAGE ADVANCE-CONTROL
MOVE 45 TO PAGE-LINE-COUNT
185 RD 32

OFFICE SYMBOL
SYSTEM CHART NO.
RUN NUMBER S1501
PAGE NUMBER 37 OF 44

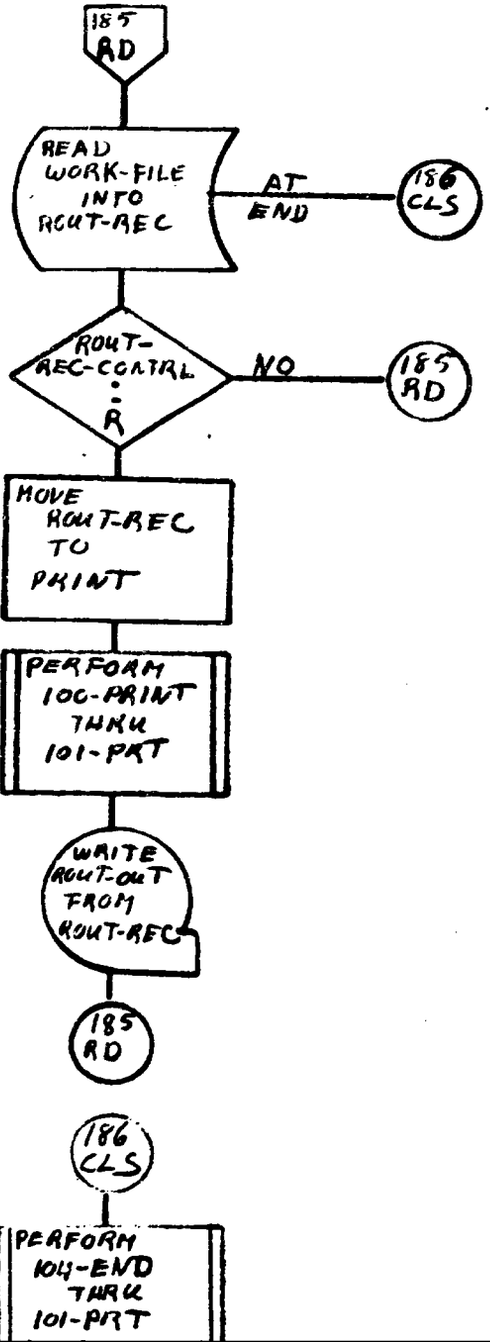

ROUT-OUT FROM ROUT-REC
185 RD
186 CLS
PERFORM NON-END TAPE LABEL 101-PRT
CLOSE WORK-FL ROUT-FL
REMOVE TAPE LABELED SLSOIROT FROM LU 06
LOAD PRINTER WITH 5X9 CONTINUOUS FORM CARD STOCK
STOP 06
190 OPN

B

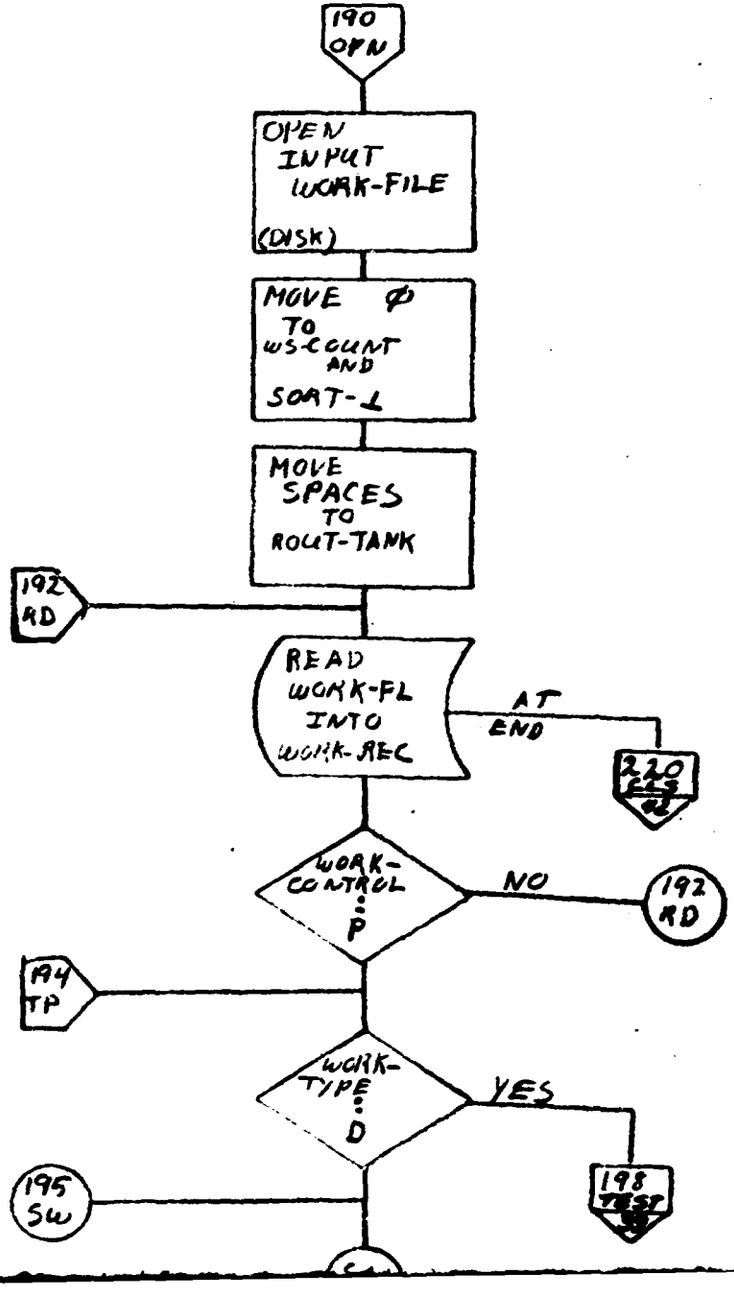
190 OPN
OPEN INPUT WORK-FILE (DISK)
MOVE Ø TO WS-COUNT AND SORT-L
MOVE SPACES TO ROUT-TANK
192 RD
READ WORK-FL INTO WORK-REC
AT END
220
WORK-CONTROL = P
NO
192 RD
194 TP
WORK-TYPE = D
YES
198 TEST
195 SW

SMUFD FORM 2072-1 (Temp) Mar 68

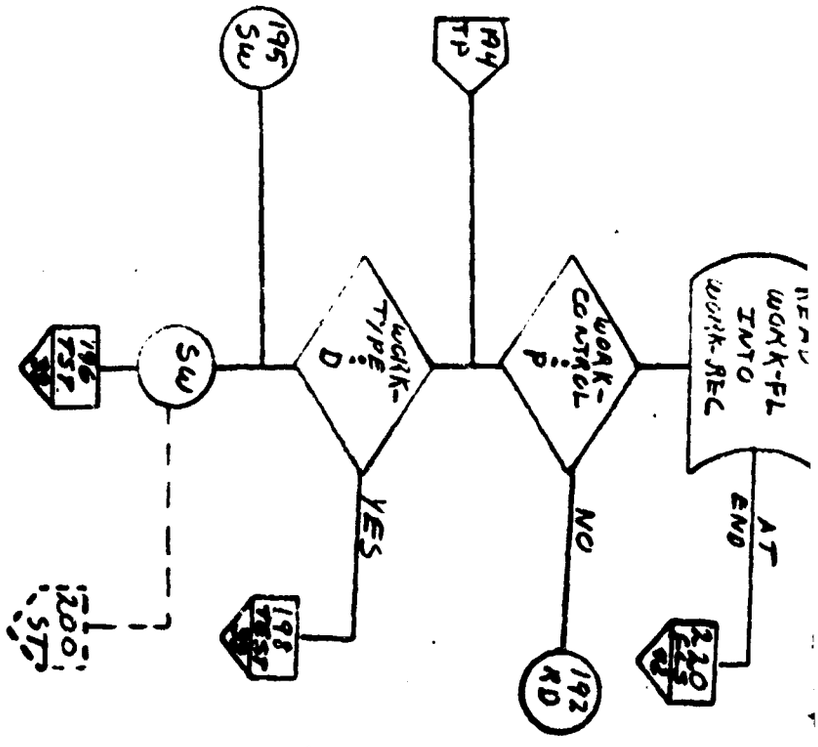

OFFICE SYMBOL
SYSTEM CHART NO.
RUN NUMBER SL501
PAGE NUMBER 39 OF 44

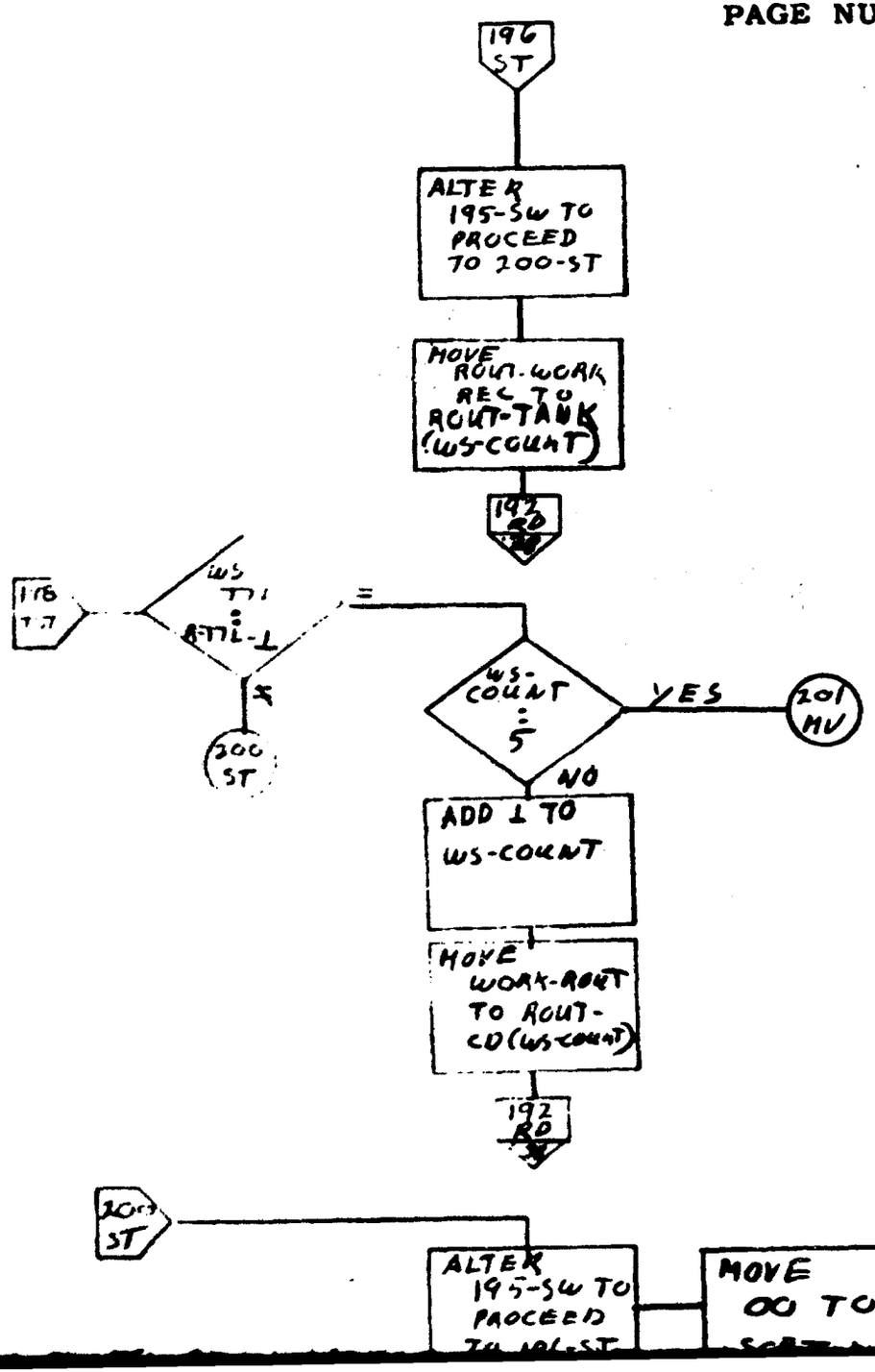

SMUFD FORM 2072-1 (T...p) Mar 68

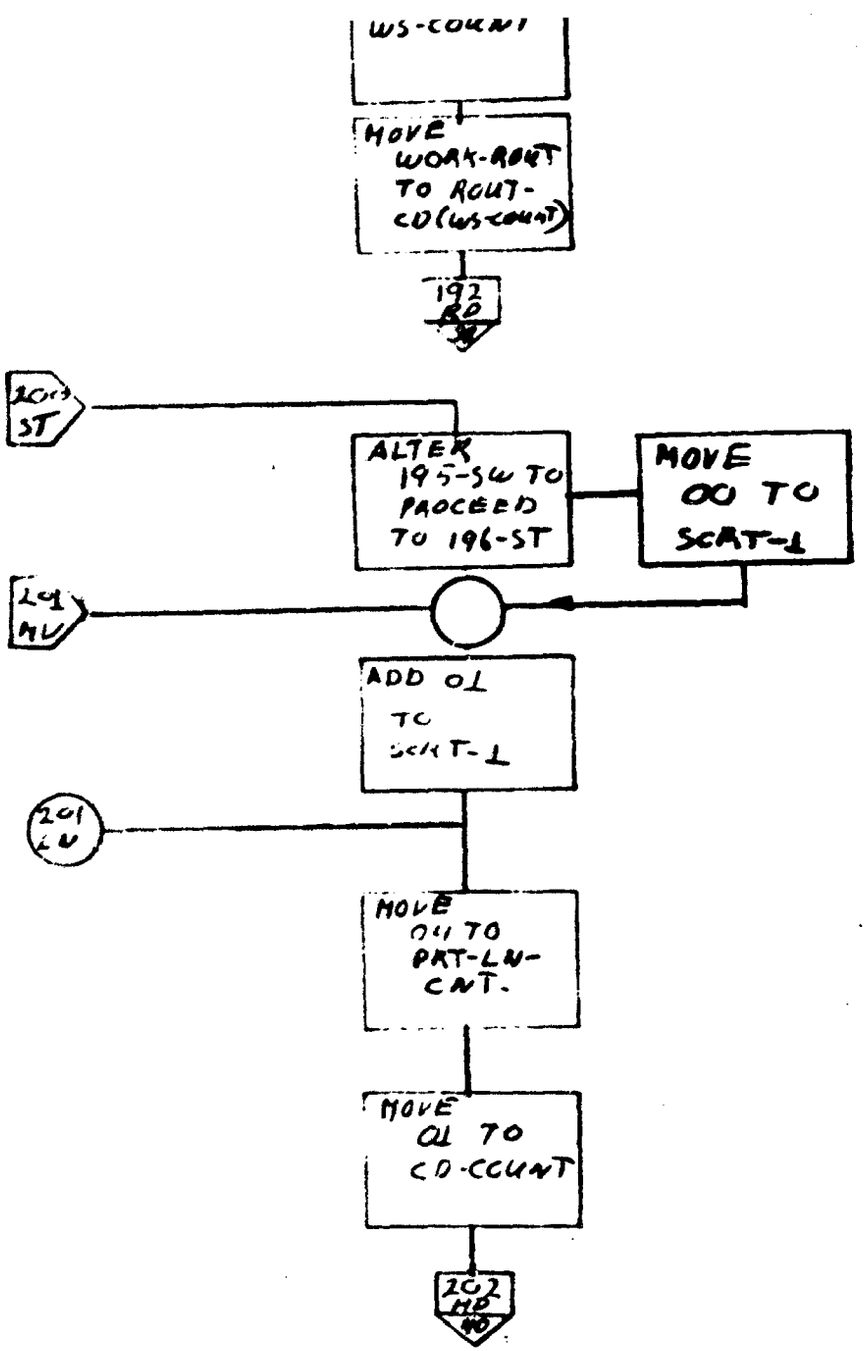

OFFICE SYMBOL
SYSTEM CHART NO.
RUN NUMBER SL501
PAGE NUMBER 40 OF 44

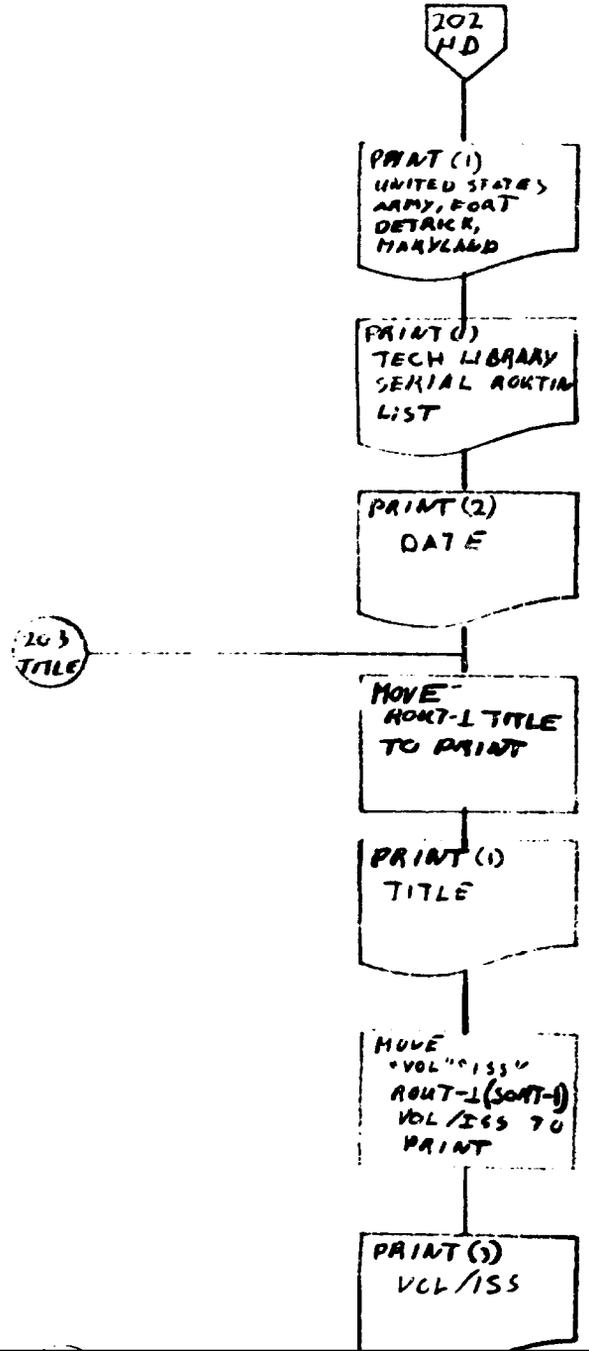

SUPED FORM 2072-1 (Temp) Mar 68

B

OFFICE SYMBOL
SYSTEM CHART NO.
RUN NUMBER S1501
PAGE NUMBER 41 OF 44

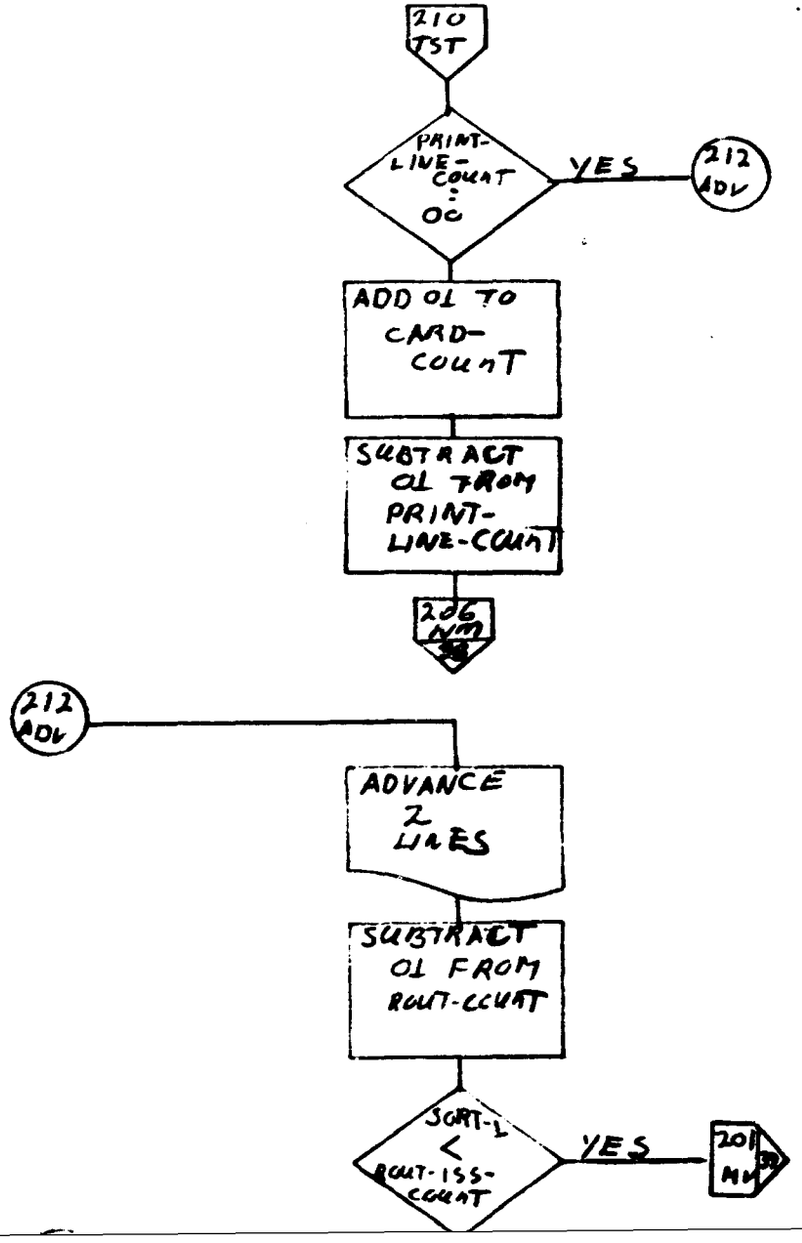

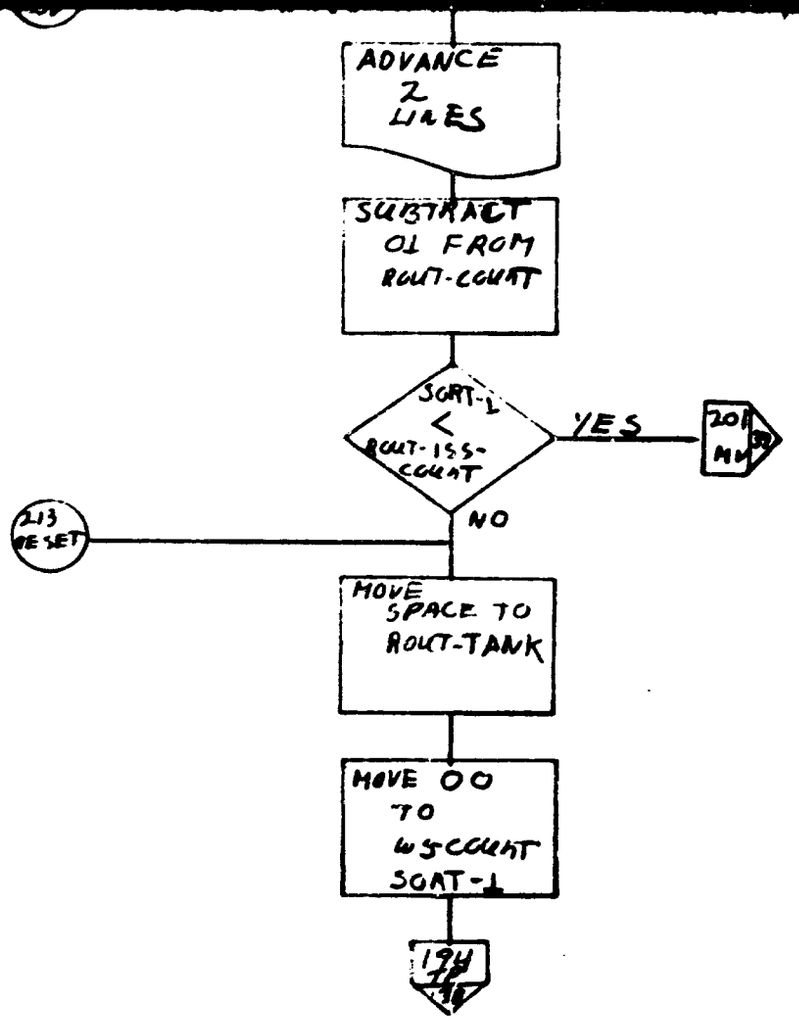

SMUFD FORM 2072-1 (T[illegible]pl Mar 68

OFFICE SYMBOL
SYSTEM CHART NO.
RUN NUMBER SL501
PAGE NUMBER 42 OF 44

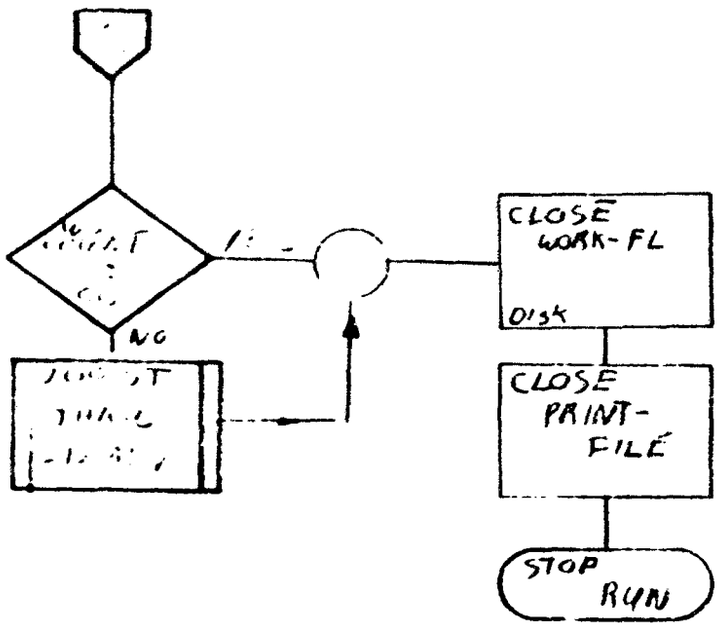

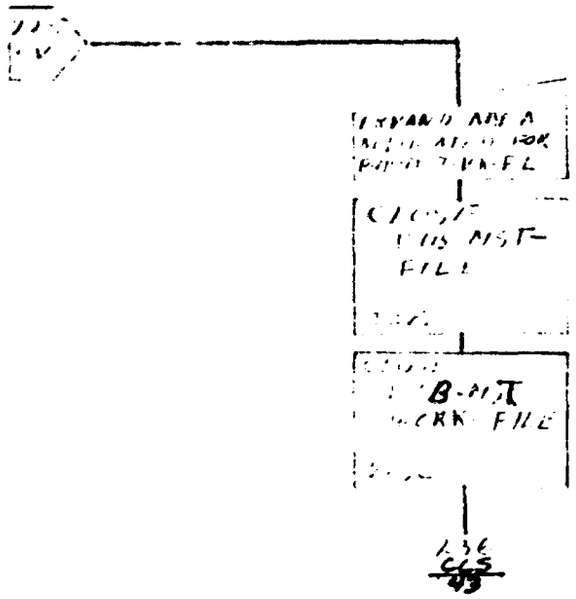

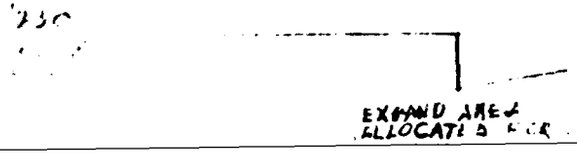

SMITED FORM 2072-1 (Tmp) Mar 68

OFFICE SYMBOL _____
SYSTEM CHART NO. _____
RUN NUMBER SL501
PAGE NUMBER 43 OF 44

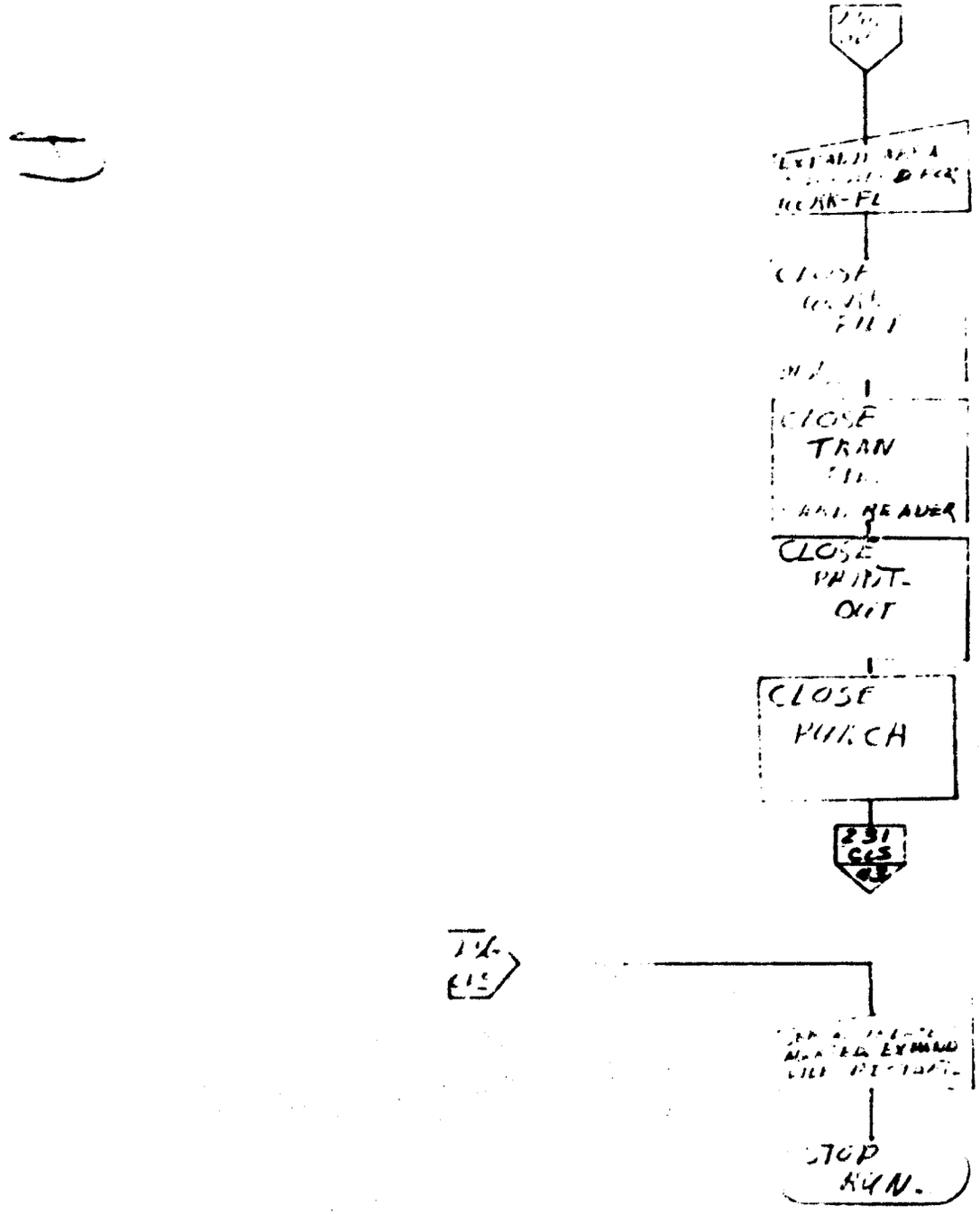

B

SAUFD FORM 2072-1 (Temp) Mar 68

OFFICE SYMBOL
SYSTEM CHART NO.
RUN NUMBER 5501
PAGE NUMBER 44 OF 44

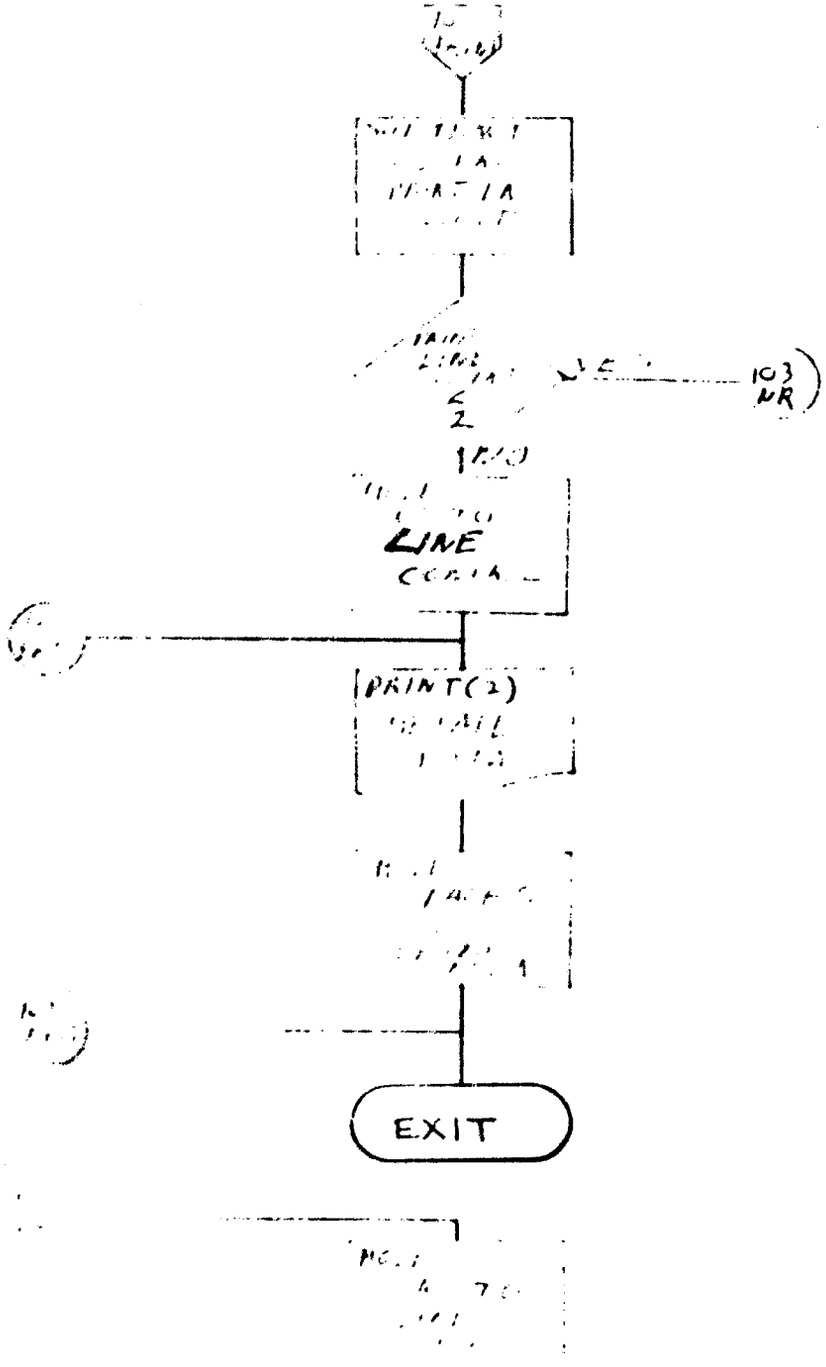

SUITED FORM 2072-1 (Top) Mov 08

OFFICE SYMBOL _____
SYSTEM CHART NO. _____
RUN NUMBER SLS02
PAGE NUMBER 1 OF 6

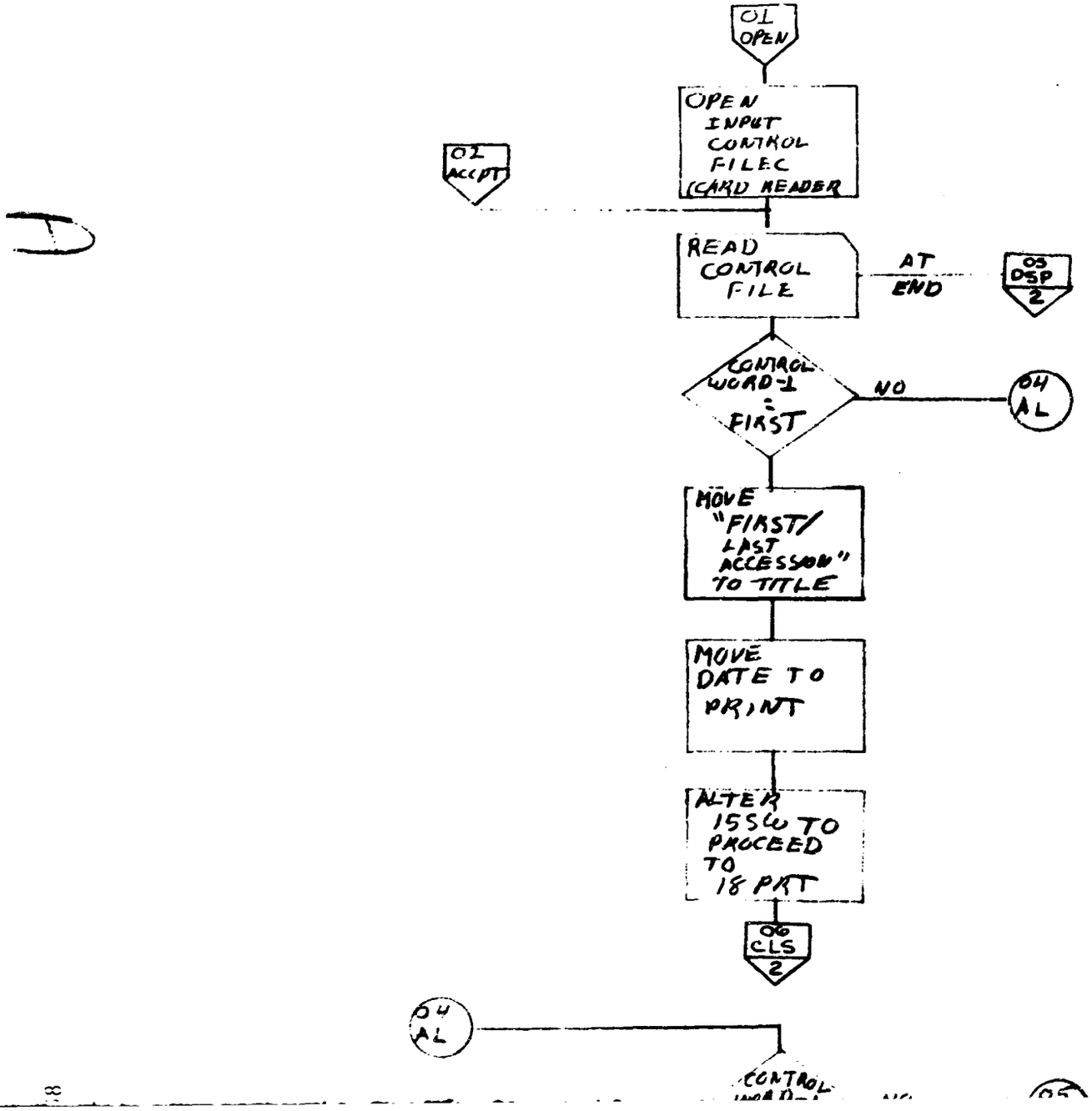

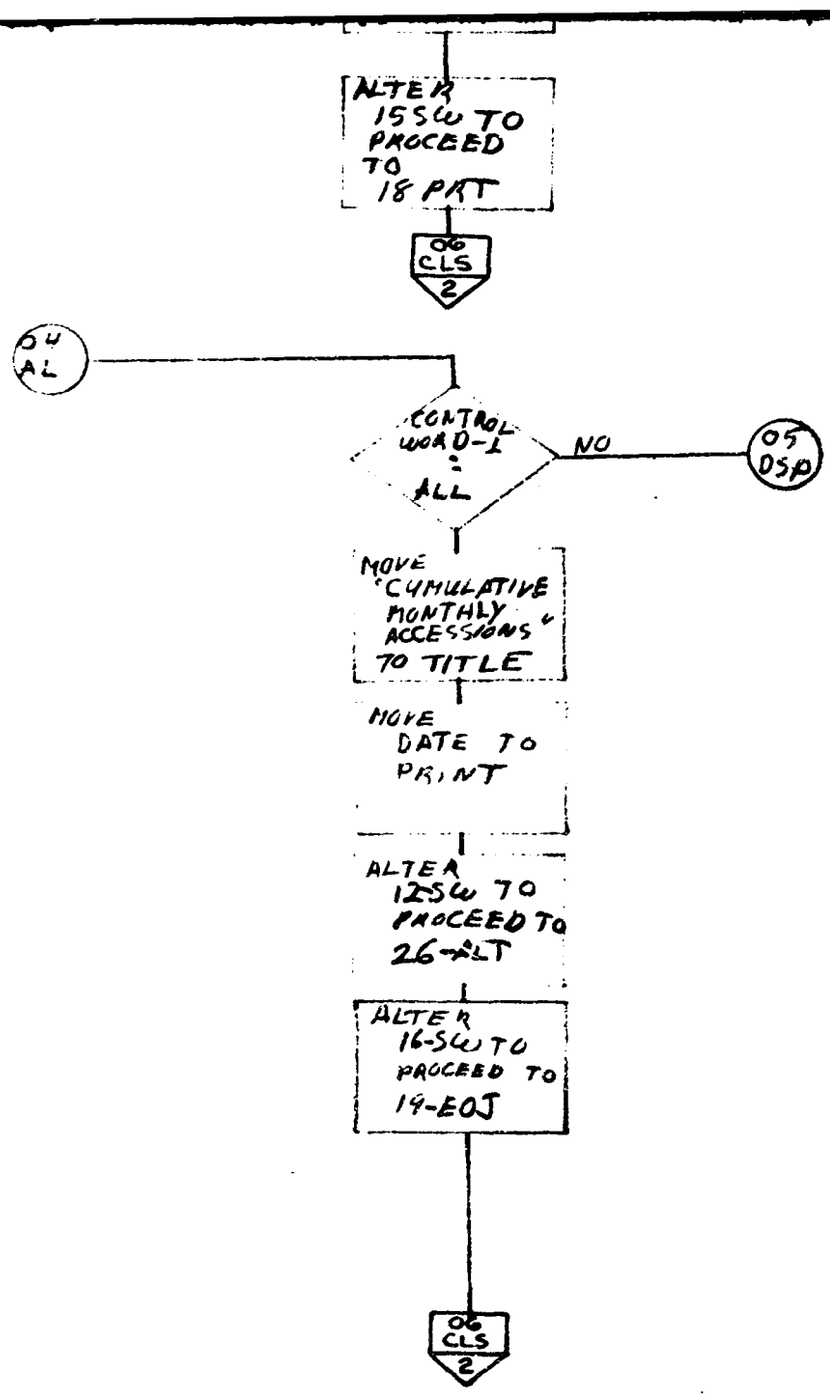
ALTER 15SW TO PROCEED TO 18 PRT
06 CLS 2
04 AL
CONTROL WORD-1 = ALL
NO
05 DSP
MOVE "CUMULATIVE MONTHLY ACCESSIONS" TO TITLE
MOVE DATE TO PRINT
ALTER 12SW TO PROCEED TO 26-ALT
ALTER 16-SW TO PROCEED TO 19-EOJ
06 CLS 2

OFFICE SYMBOL
SYSTEM CHART NO.
RUN NUMBER SL502
PAGE NUMBER 2 OF 6

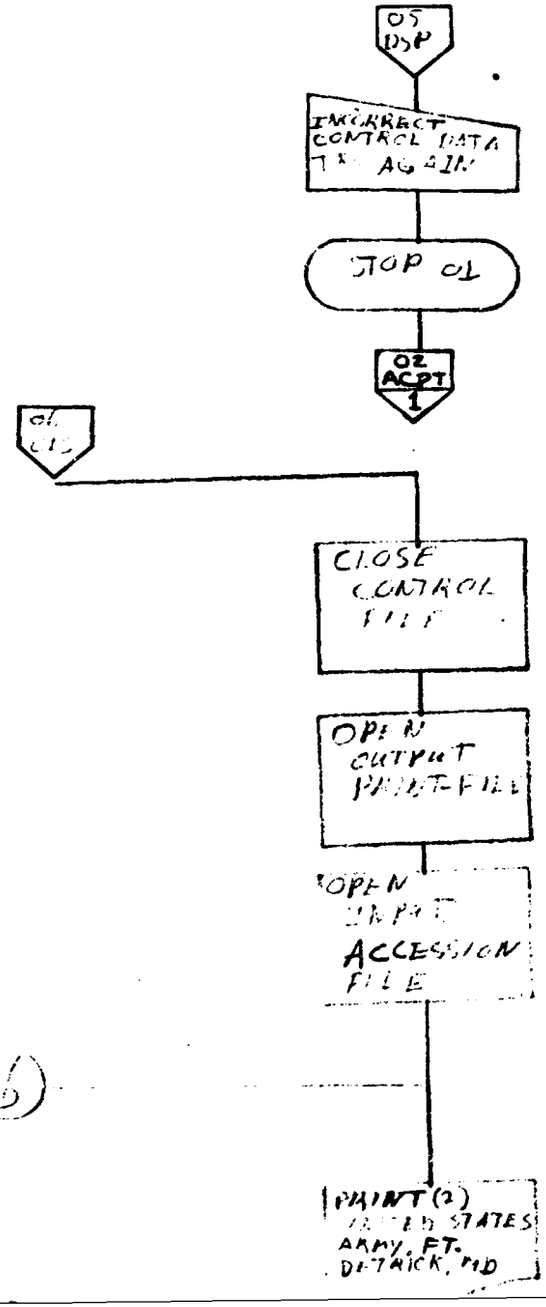

SMUFD FORM 2072-1 (Temp) Mar 68

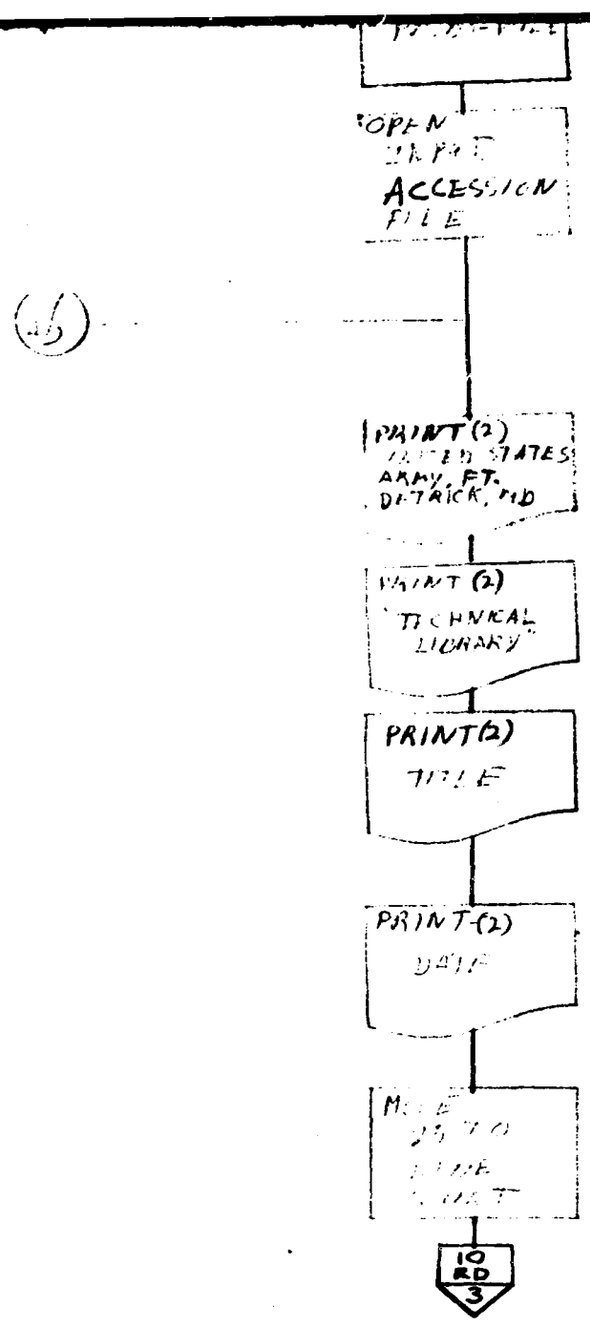

OFFICE SYMBOL
SYSTEM CHART NO.
RUN NUMBER SLS02
PAGE NUMBER 3 OF 6

D

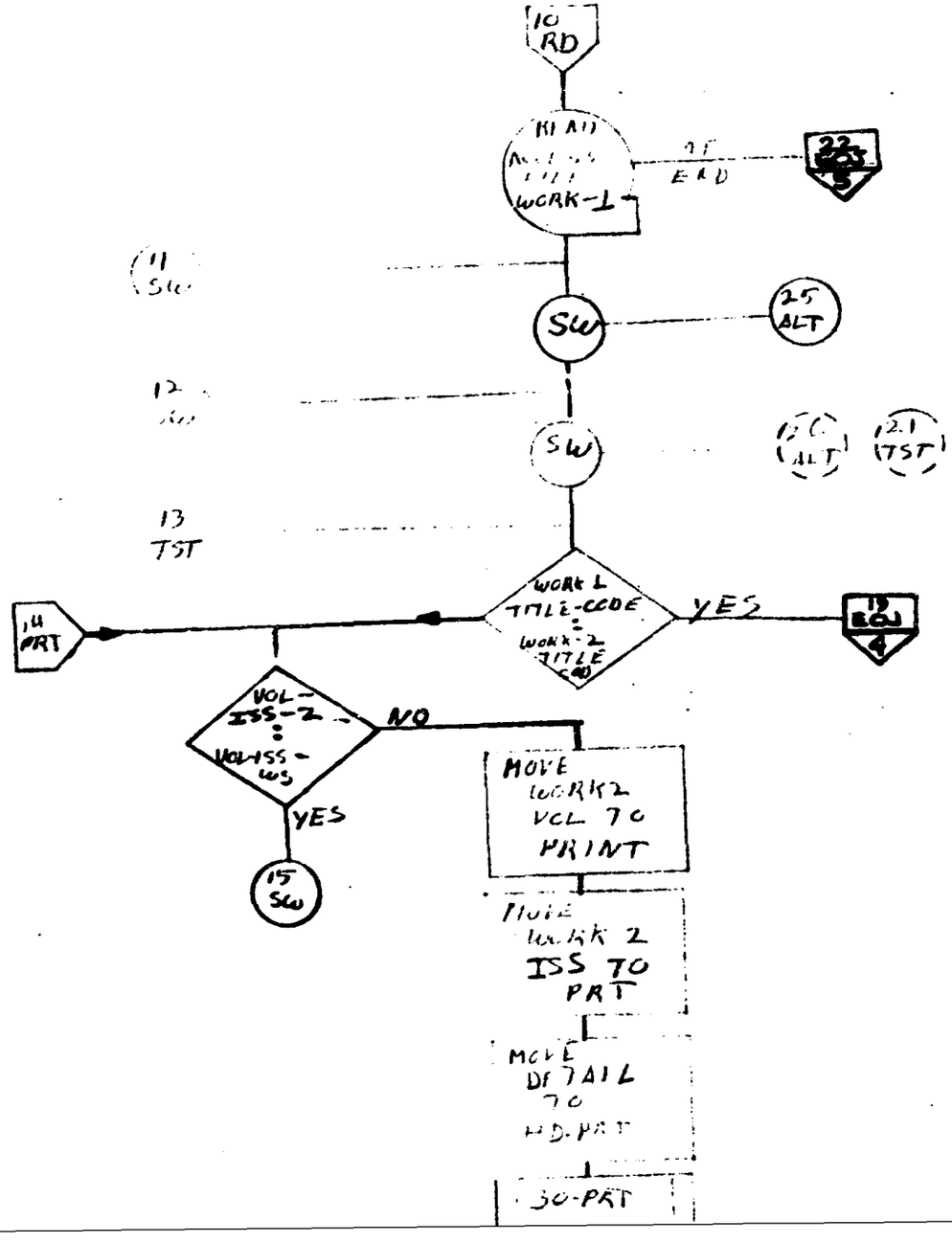

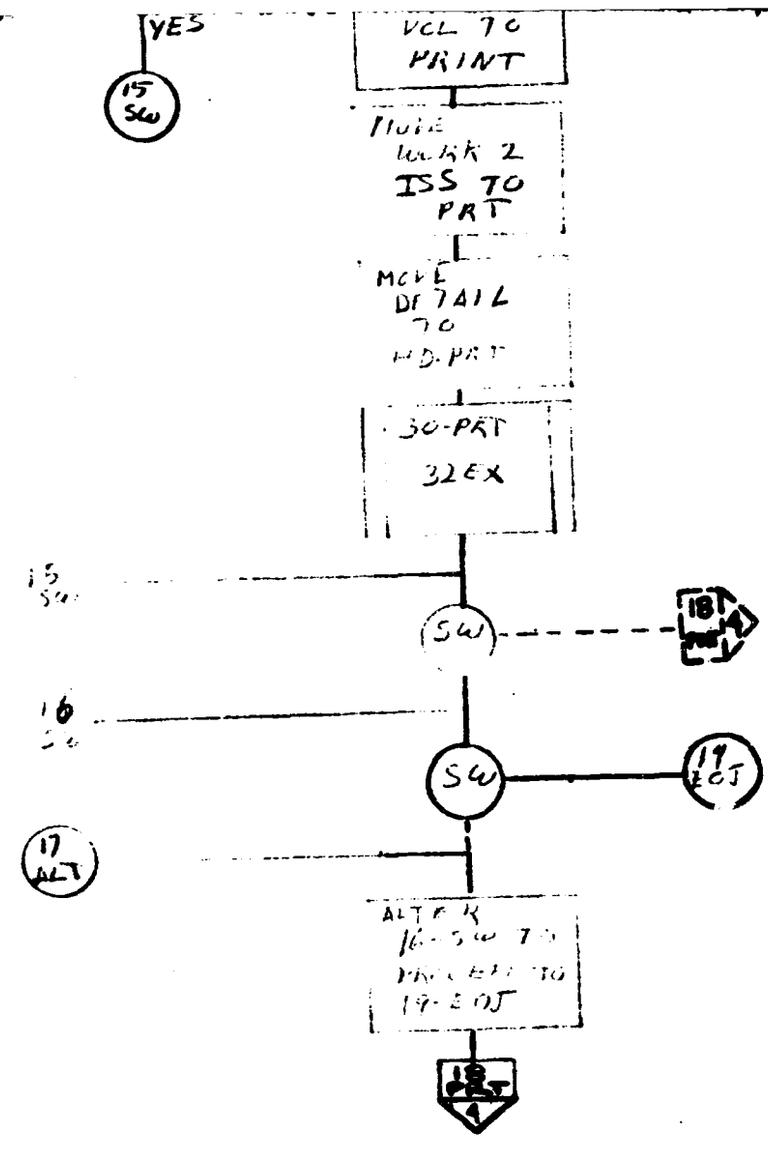

SMUFD FORM 2072-1 (Temp) Mar 68

OFFICE SYMBOL _____
SYSTEM CHART NO. _____
RUN NUMBER SL302
PAGE NUMBER 4 OF 6

D

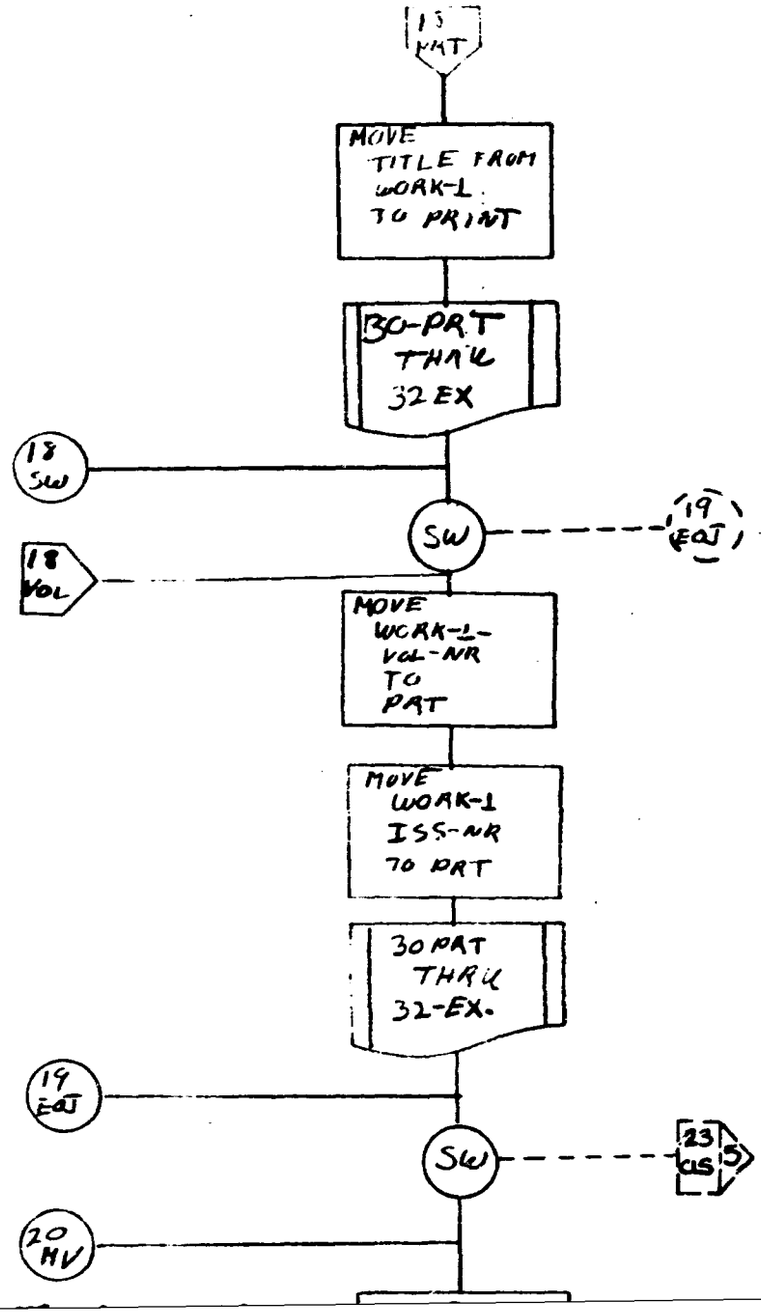

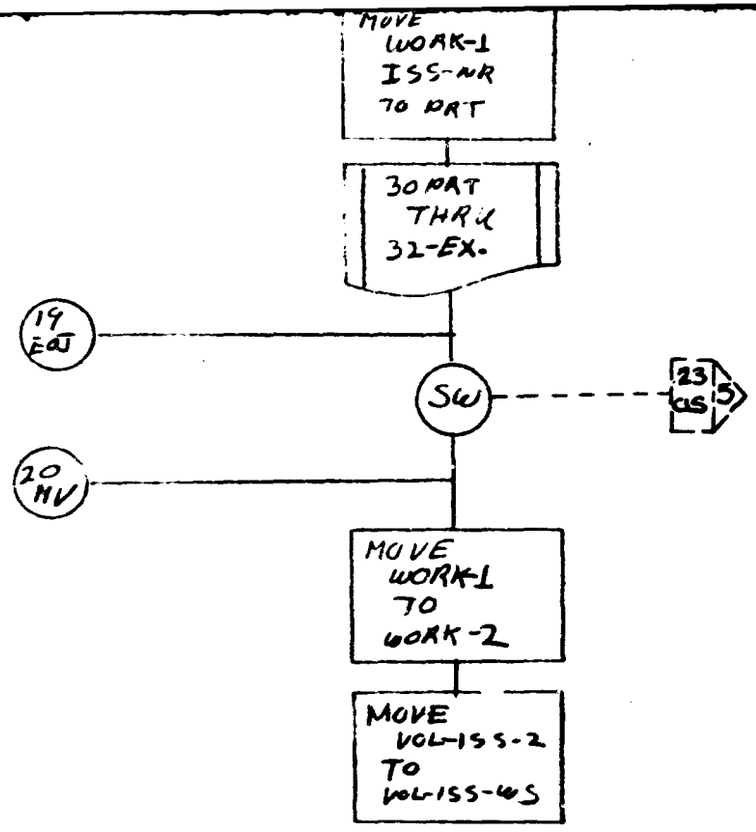

SMUFD FORM 2072-1 (T[illegible]p) Mar 68

OFFICE SYMBOL _____
SYSTEM CHART NO. _____
RUN NUMBER SL502
PAGE NUMBER 5 OF 6

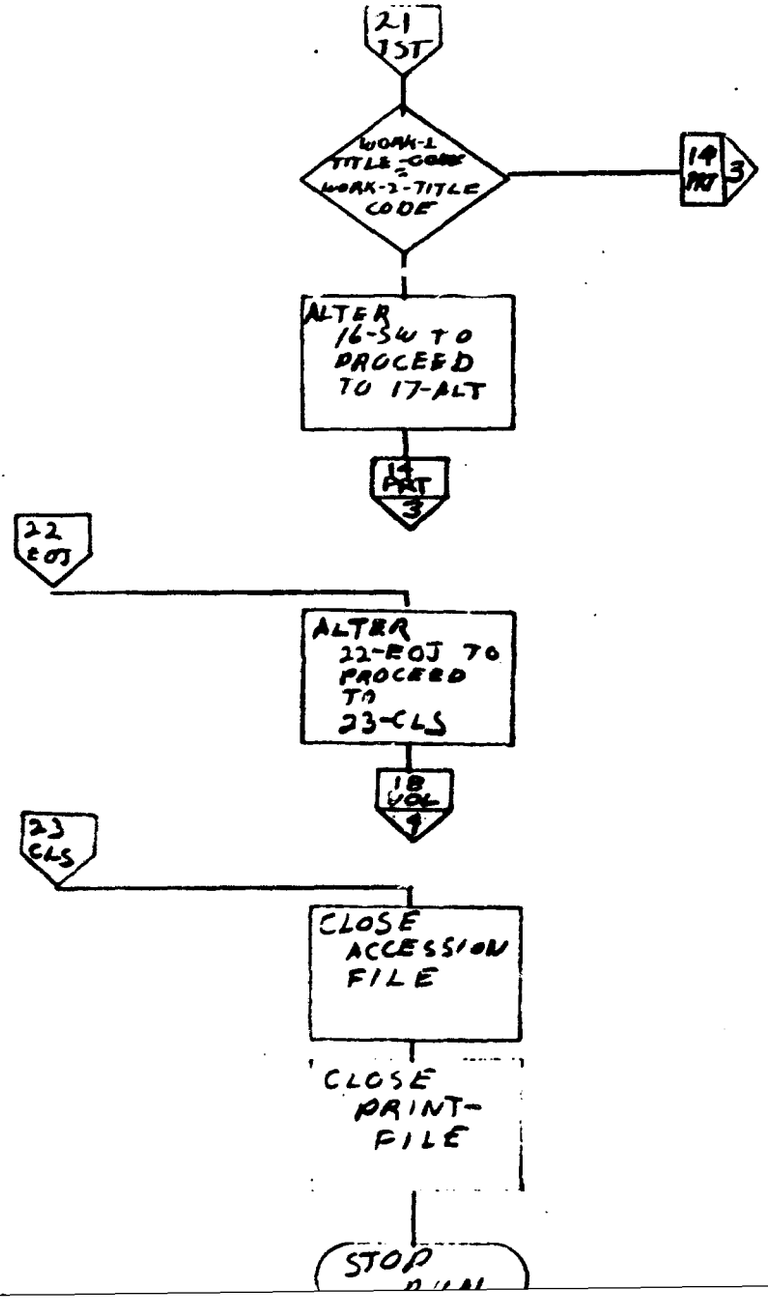

SMUFD FORM 2072-1 (Temp) May 68

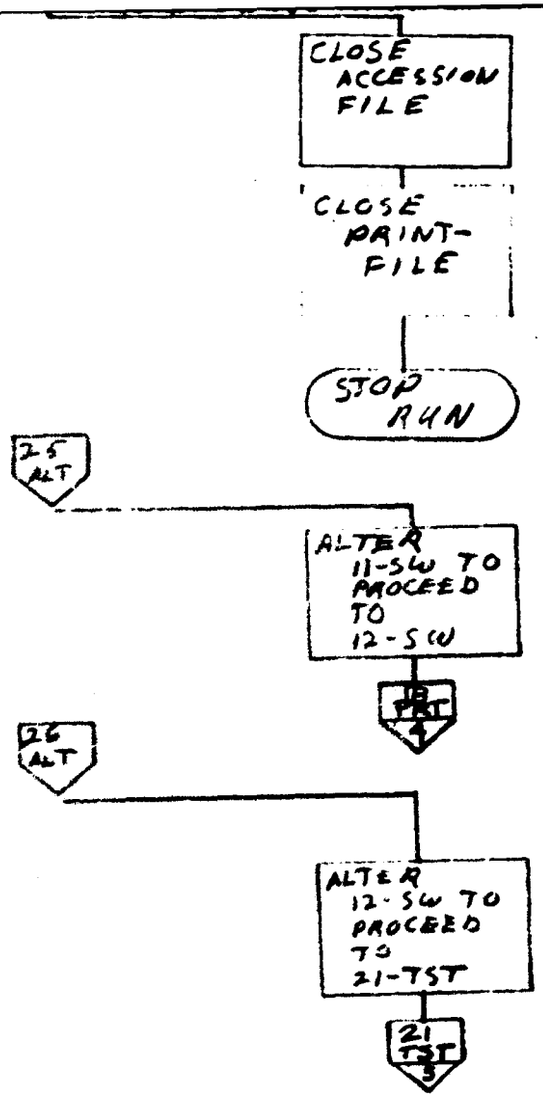

OFFICE SYMBOL
SYSTEM CHART NO.
RUN NUMBER SL302
PAGE NUMBER 6 OF 6

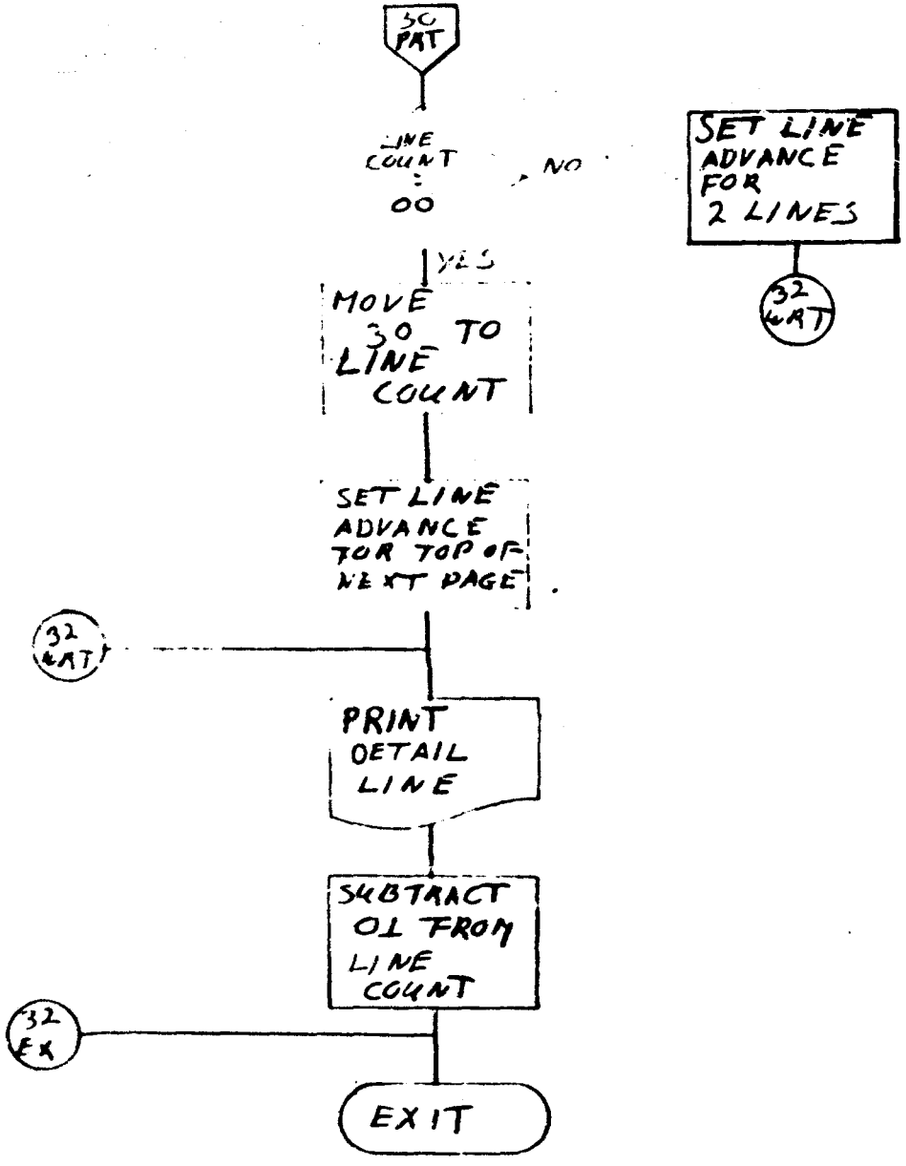

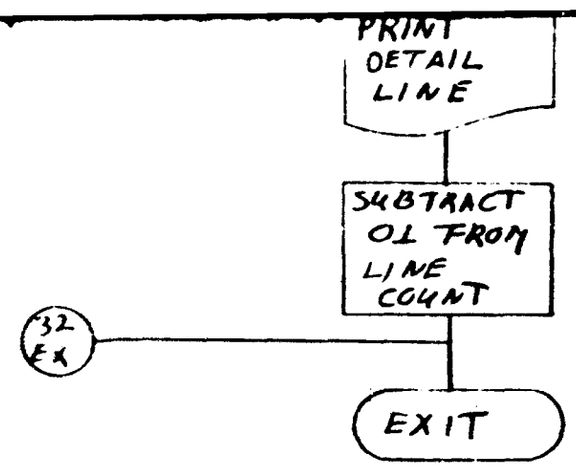

SMUFD FORM 2072-1 (Temp) Mar 68

OFFICE SYMBOL _____
SYSTEM CHART NO. _____
RUN NUMBER SL503
PAGE NUMBER 1 OF 4

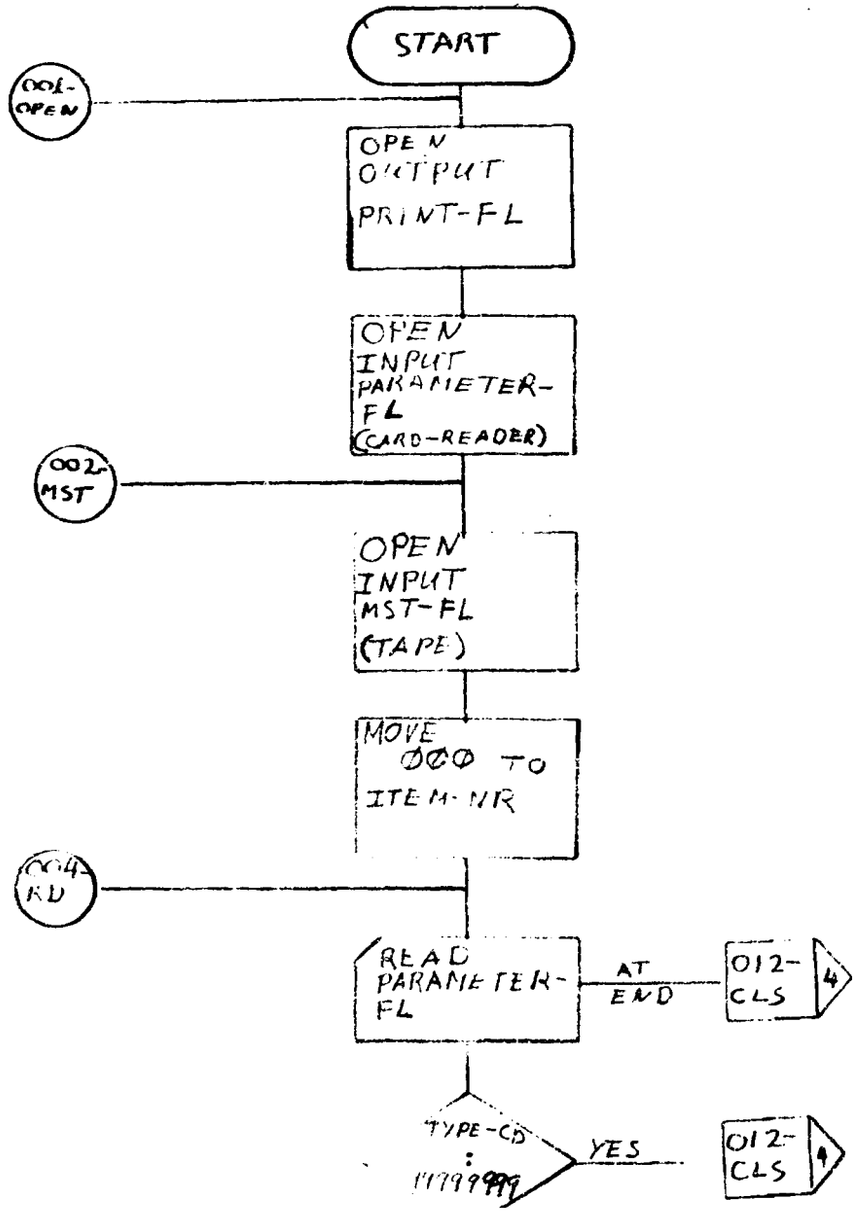

SMUFD FORM 2072-1 (Transp) Mar 68

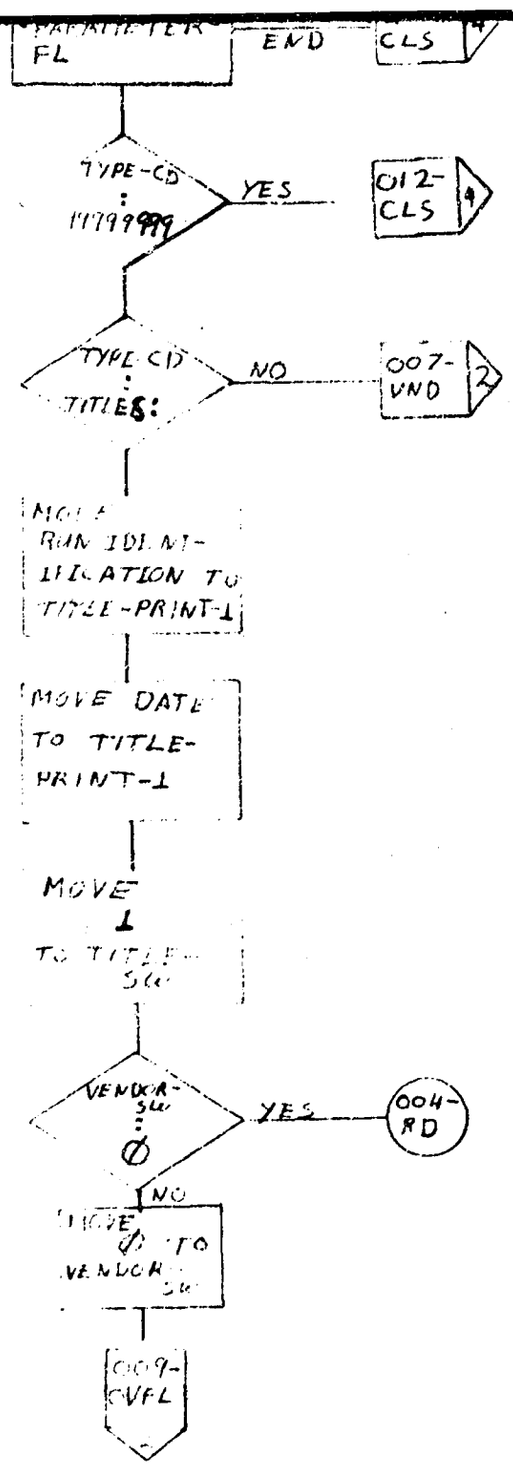

OFFICE SYMBOL _____
SYSTEM CHART NO. _____
RUN NUMPER 51503
PAGE NUMBER 2 OF 4

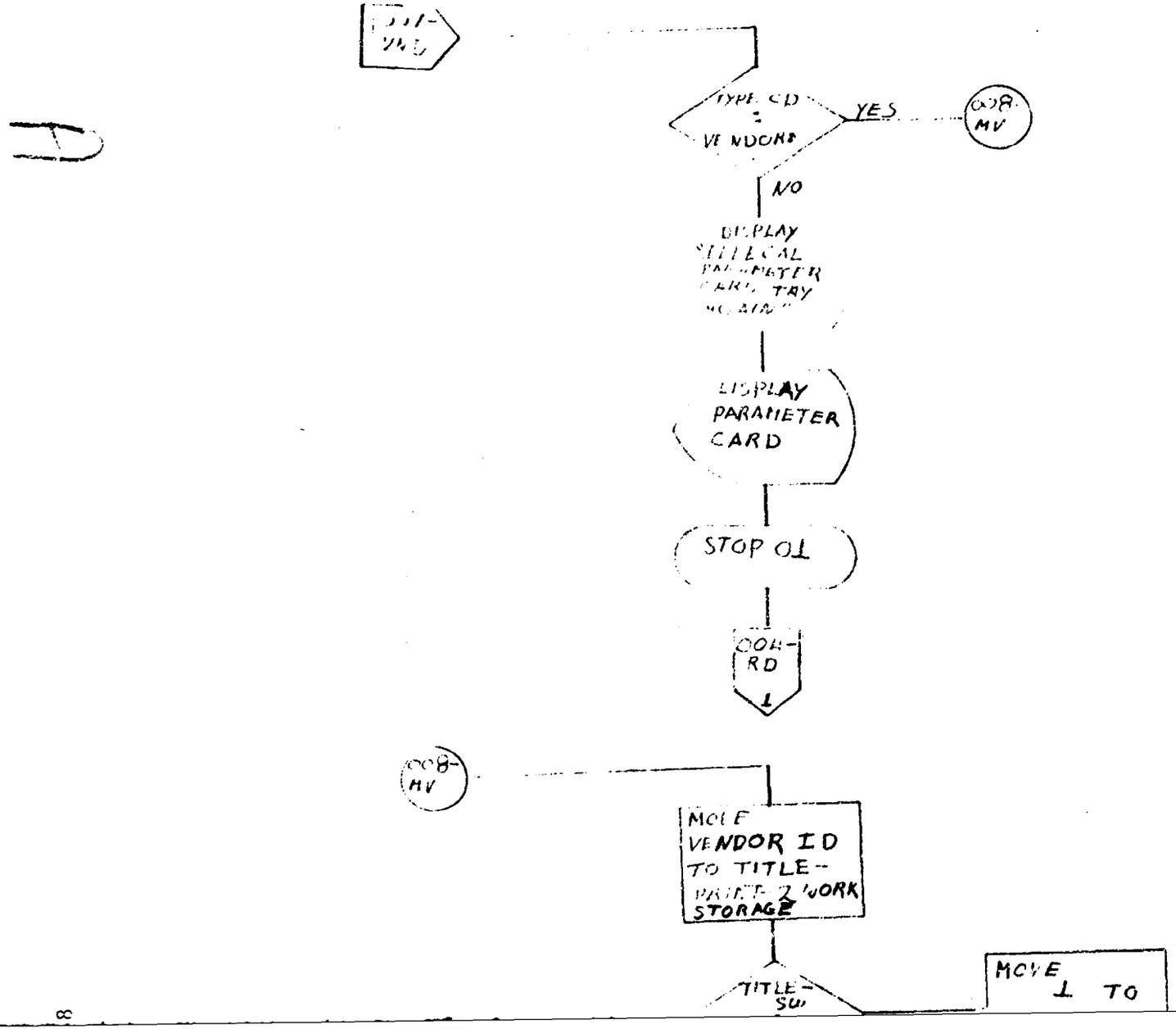

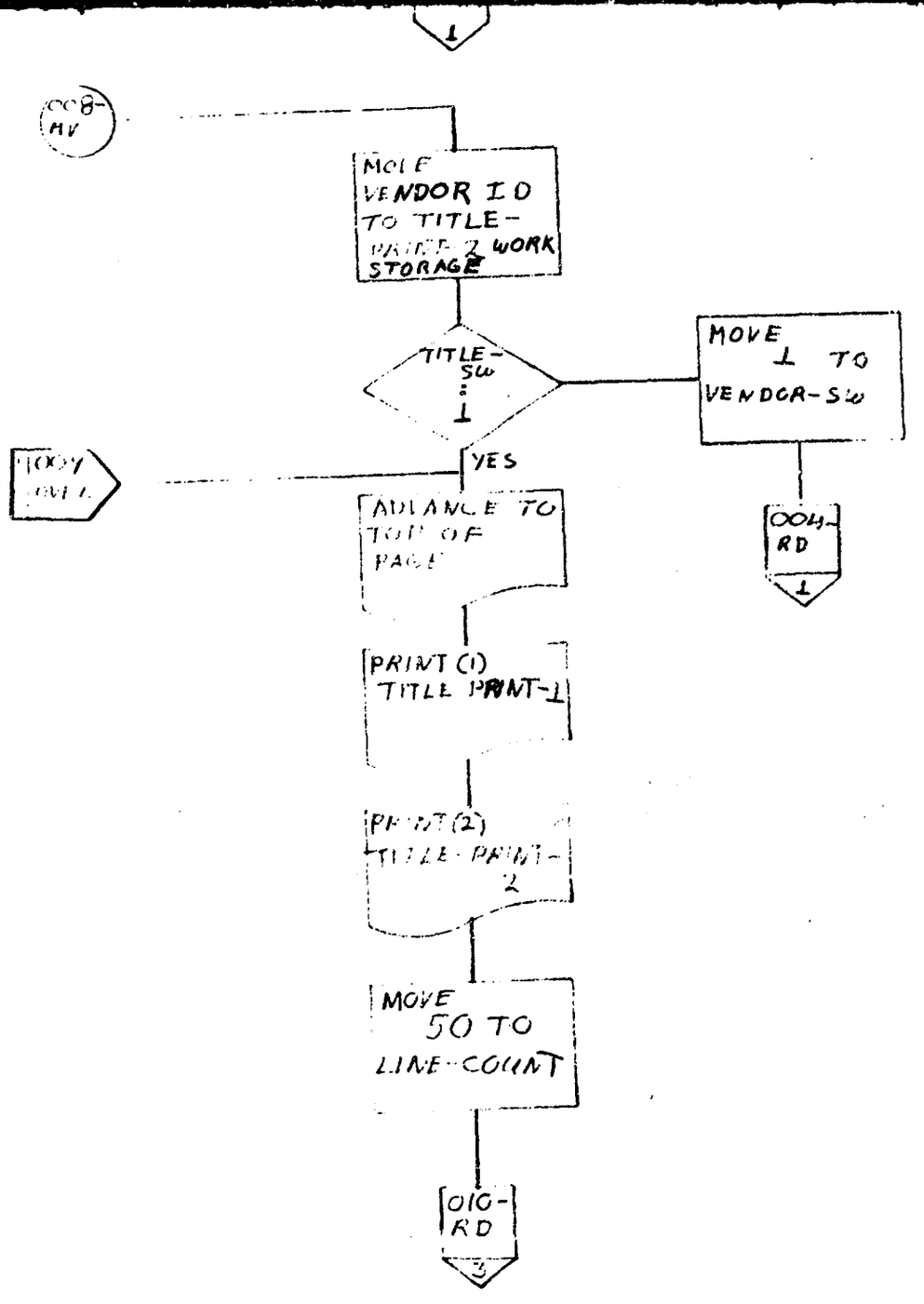
1
008-MV
MOVE VENDOR ID TO TITLE-PRINT-2 WORK STORAGE
TITLE-SW = 1
MOVE 1 TO VENDOR-SW
004-RD
1
COPY OVER
YES
ADVANCE TO TOP OF PAGE
PRINT (1) TITLE PRINT-1
PRINT (2) TITLE-PRINT-2
MOVE 50 TO LINE-COUNT
010-RD
3

OFFICE SYMBOL
SYSTEM CHART NO.
RUN NUMBER 52303
PAGE NUMBER 3 OF 4

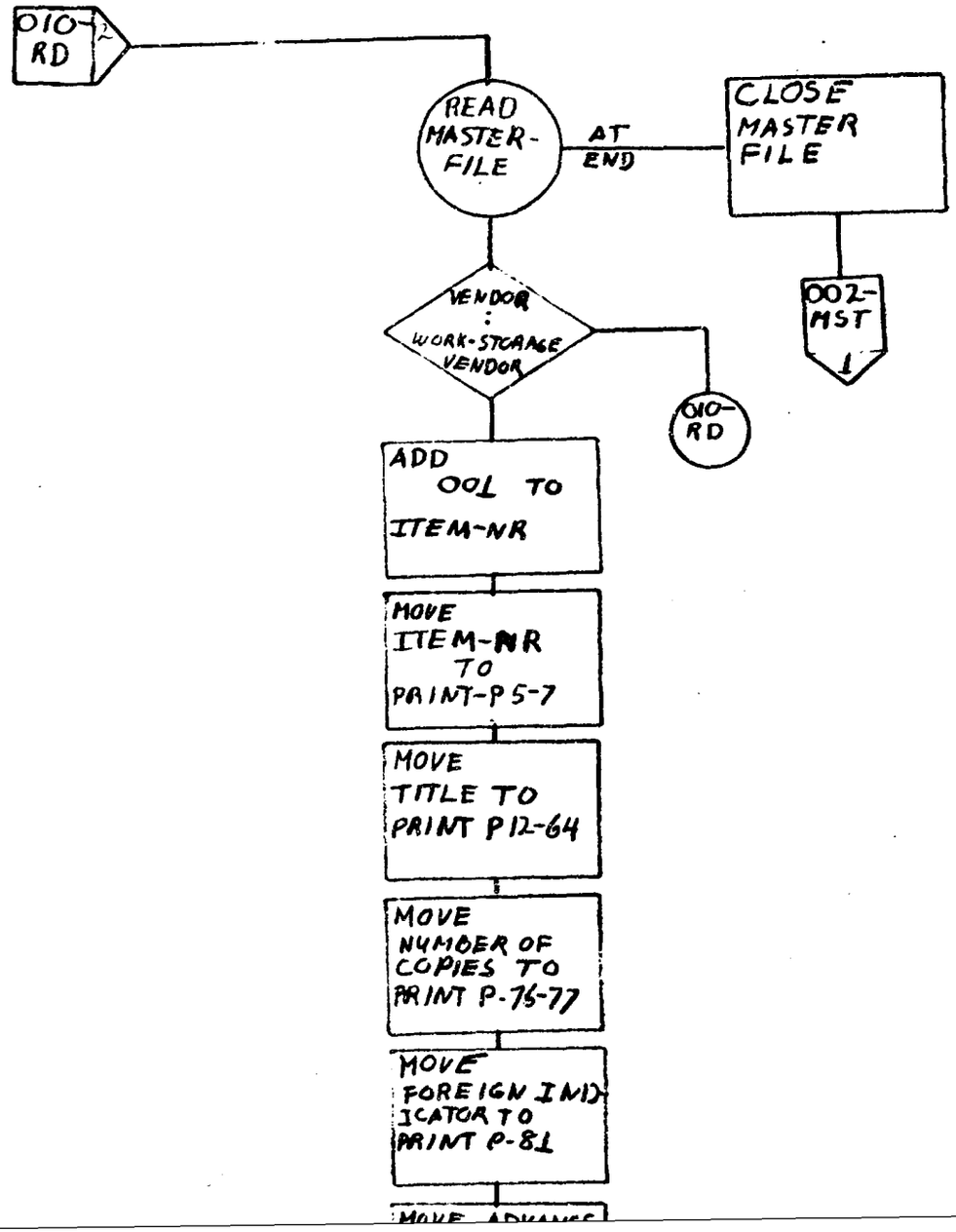

68

SMUFD FORM 2072-1 (Temp) Mar 68

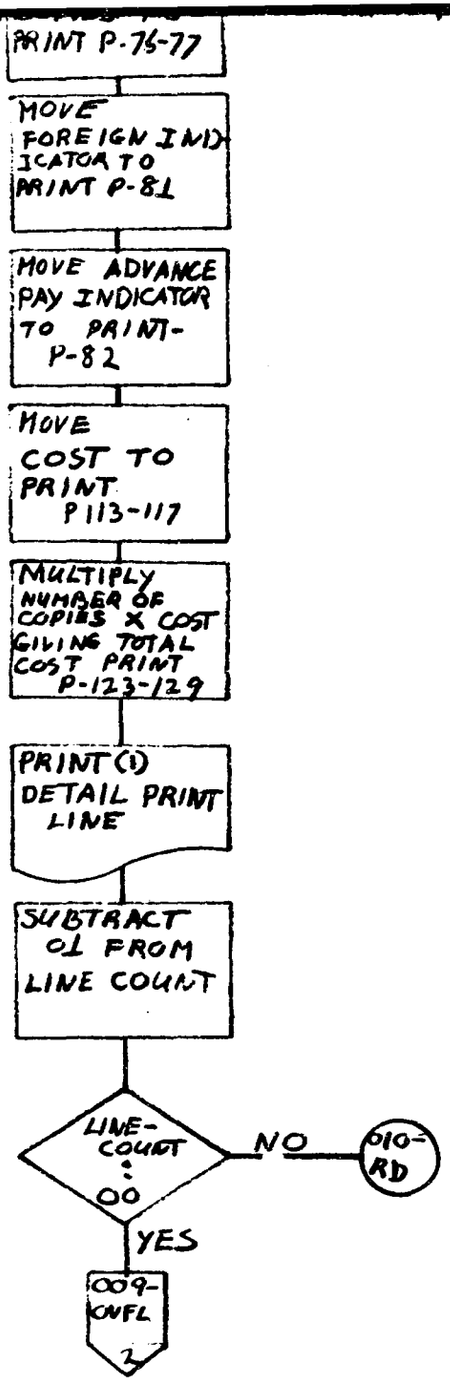

OFFICE SYMBOL
SYSTEM CHART NO.
RUN NUMBER 52303
PAGE NUMBER 1 OF 1

D

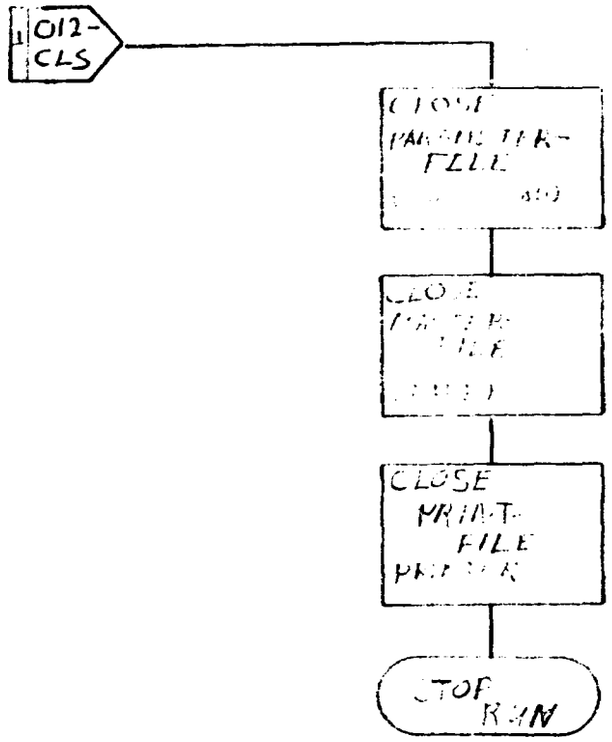

SMUFD FORM 2072-1 (Temp) Mar 68

Security Classification

DOCUMENT CONTROL DATA - R & D

(Security classification of title, body of abstract and indexing annotation must be entered when the overall report is classified)

1. ORIGINATING ACTIVITY (Corporate author)	2a. REPORT SECURITY CLASSIFICATION
Wolf Research and Development Corporation	Unclassified
	2b. GROUP: Not Applicable

3. REPORT TITLE

Serial Automation System (Journal Control)

4. DESCRIPTIVE NOTES (Type of report and inclusive dates)

Final Report

5. AUTHOR(S) (First name, middle initial, last name)

Dalzill E. Westfall

6. REPORT DATE	7a. TOTAL NO. OF PAGES	7b. NO. OF REFS
February 1969	98	None

8a. CONTRACT OR GRANT NO.	9a. ORIGINATOR'S REPORT NUMBER(S)
DAAA-13-68-C-0173	None
b. PROJECT NO.	
c.	9b. OTHER REPORT NO(S) (Any other numbers that may be assigned this report)
d.	None

10. DISTRIBUTION STATEMENT

Distribution of this document is unlimited.

11. SUPPLEMENTARY NOTES	12. SPONSORING MILITARY ACTIVITY
Supersedes AD 621 067	Department of Army Fort Detrick Frederick, Maryland 21701

13. ABSTRACT

The Serial Library System (Journal Control) maintains scientific and technical journal records of the Fort Detrick Technical Library. These records have been automated to facilitate the production of receiving reports, accession lists, routing lists, and management review of subscription contracts. The programs revise those reported in AD-621 067 and are written in COBOL for a CDC 3150 computer with disc drives.

DD FORM 1 NOV 68 1473 REPLACES DD FORM 1473, 1 JAN 64, WHICH IS OBSOLETE FOR ARMY USE.

Security Classification